Installation and Operating Manual for Components

# HST®-TZ2

**Guard-locking mechanism**
(Translation of Original Manual)

HST-TZ2 Ident.-No.: 10242

HST-TZ2 Ident.-No.: 10243

HST-TZ2 Ident.-No.: 10244

HST-TZ2 Ident.-No.: 10245

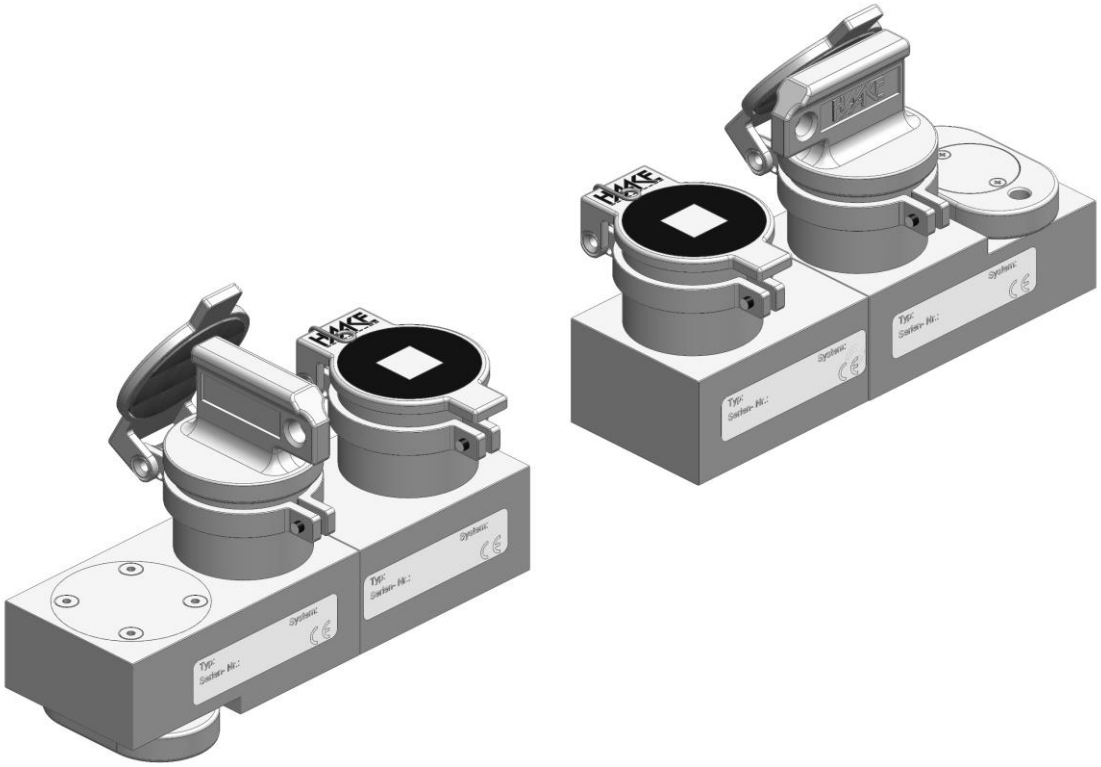

HST-TZ2, pictured Ident-No. 10242 and 10245
The image may differ from the product.

**Read the operating manual before beginning any work!**

Haake Technik GmbH
Master Esch 72
48691 Vreden, Germany
info@haake-technik.com
www.haake-technik.com
Tel.: +49 2564 39650
Fax: +49 2564 396590

Doc-ID. 411966
06-2013

This installation and operating manual contains proprietary information, which is subject to copyright. No parts of this documentation may be reproduced or transferred in any manner or by any means, be it electronic or mechanical, for any purpose without obtaining prior written consent.
Haake Technik GmbH assumes no liability for damage or subsequent damage, arising from the use of components or replacement parts, which are not original parts.
Haake and HST are registered trademarks of Haake Technik GmbH. All other brand and product names not mentioned here are or may be registered trademarks and are to be treated accordingly.

© Haake Technik GmbH, Master Esch 72, 48691 Vreden, Germany
All rights reserved.

# Contents

1 Scope ... 3
2 Intended use ... 3
3 Symbol Explanation ... 3
4 Disposal ... 3
5 Foreseeable misuse ... 4
6 Identification ... 4
7 Safety-related functioning ... 4
8 Defects which cannot occur ... 5
9 Scope of delivery ... 6
10 Structure and function ... 7
10.1 Description ... 7
10.2 Example ... 7
11 Safety measures ... 8
11.1 Organisational measures ... 8
11.2 Safety of persons ... 8
11.3 Operating conditions and limitations of use ... 8
11.4 Assembly ... 8
11.5 Repairs / Alterations ... 8
12 Installation ... 9
12.1 Preparation ... 9
12.2 General approach ... 9
12.3 Installation instructions ... 9
13 Performance check ... 10
14 Operation ... 10
14.1 Opening the separating safeguard ... 10
14.2 Interlocking the separating safeguard ... 10
15 Maintenance ... 11
16 Cleaning ... 11
17 De-installation ... 11
18 Troubleshooting ... 12
19 Technical data ... 12
20 Dimensions ... 13
21 EC Declaration of Conformity ... 15

# 1 Scope

This installation and operating manual is intended for persons who have been authorized to carry out tasks involving the installation or operation of the HST-series. International, national and, where appropriate, regional regulations are to be observed when handling key transfer systems.

If you have any questions which are not answered in this manual, please get in touch with your regional customer service centre or else make direct contact with

**Haake Technik GmbH**
Master Esch 72, 48691 Vreden, Germany
Telephone +49 2564 39650
Fax +49 2564 396590
Info@haake-technik.com

# 2 Intended use

The Guard-locking mechanism HST-TZ 2 with an adjacent Actuator serves as access protection and can be used on separating safeguards such as swing doors and sliding doors or flaps. The Actuator can be removed by operating the HST-TZ 2, whereby the safeguard can be opened.

In conjunction with other components (key transfer system), it can be ensured that no danger areas can be reached after opening the safeguard.

Other applications are prohibited.

# 3 Symbol Explanation

Warnings are indicated by symbols. The notices are introduced by signal words to indicate the extent of the hazard.



**Attention!**

**… indicates a potentially hazardous situation, which may lead to personal injury and damage to property if it is not avoided.**



*NOTE!*

*… highlights useful tips and recommendations as well as information for efficient and fault-free operation.*

# 4 Disposal



The device must be properly disposed of in accordance with national laws and regulations.

## 5 Foreseeable misuse

Never operate the keys with extended lever arms. This can damage the internal components and may render the safety function inoperative.
Do not attempt to unlock the component with objects other than the corresponding keys.
Do not attempt to insert or remove a key by applying excessive force or with the aid of a tool (hammer)



**Attention!**

**In rear access safeguards it cannot be excluded that a person will be in the danger area when the safeguard is closed and guard locking by the HST-TS1 is effective. For such cases, a Guard-locking mechanism with a second key (personal key) is to be used.**

## 6 Identification

You can find the model designation and serial number on the component's type label for exact identification.
If the component is part of a key transfer system, this information, except for the serial number, can also be found on the key plan.
Note these details (prior to installation, if necessary), so that they can be provided in case of questions or for ordering spare parts.

## 7 Safety-related functioning

The safety-related function is performed according to the following requirements:

1. No removal of the actuator for personal keys, which have not been turned, and release keys, which have not been inserted and turned.
2. No removal of the actuator for actuators, which have not been inserted and interlocked, and personal keys, which have not been inserted and turned.

## 8 Defects which cannot occur

Due to the construction, materials, and components used for the component, the faults listed in the table can be excluded:

| Potential Defect | Elimination of Defect | Limitations of Use | Reason |
|---|---|---|---|
| Wear, corrosion. | Permissible acc. To tables A.4 and A.5 of DIN EN ISO 13849-2. | See sections 2 **Intended use** and sections 19 **Technical data**. | Application of carefully selected materials and manufacturing processes; use of proven springs and special mounting methods. |
| Non-tightening /Loosening (parts of the component). | Permissible acc. To tables A.4 and A.5 of DIN EN ISO 13849-2. | See section 2 **Intended use**. | Application of carefully selected materials and manufacturing processes; use of proven springs and special mounting methods. |
| Weakening of force due to remaining deformation or fracture. | Permissible acc. To table A.5 of DIN EN ISO 13849-2. | See section 14 **Operation**. | Use of proven spring and special mounting methods. |
| Fracture, deformation due to excessive load. | Permissible acc. To tables A.4 and A.5 of DIN EN ISO 13849-2. | See section 14 **Operation**. | Application of carefully selected materials; over dimensioning using safety factor 2 and replication of parts; use of proven springs and special mounting methods. |
| Stiffness/Getting stuck. | Permissible acc. To tables A.4 and A.5 of DIN EN ISO 13849-2. | See sections 2 **Intended use** and sections 14 **Operation**. | Application of carefully selected materials; over dimensioning using safety factor 2 and replication of parts; use of proven springs and special mounting methods. |

## 9 Scope of delivery

1 x Guard-locking mechanism HST-TZ2 unit consisting of casing, with an integrated lock, casing with a blocking mechanism, and inserted personal key and an adjacent actuator (actuator interlocked in the protection position).

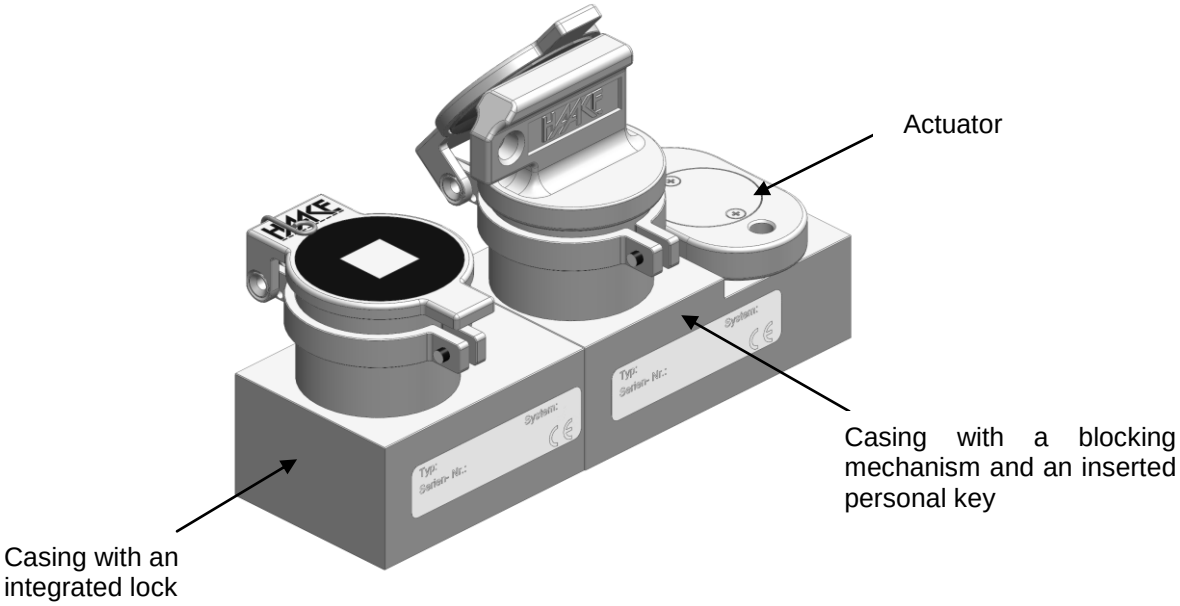


Figure shows HST-TZ2 Ident.-No.: 10242

*NOTE!*

*Means of attachment and properly coded acess key are **not** included in the scope of the delivery.*

# 10 Structure and function

## 10.1 Description

The guard-locking mechanism consists of casing with an integrated lock, casing with a blocking device, an integrated lock and a personal key, and an actuator. To remove the personal key the coded key is inserted and turned in this lock. The personal key can then be turned and removed. The blocking device releases the actuator; this can by removed by turning it.
The guard-locking device HST-TZ2 ensures that the inserted and turned release key can only be removed if the safeguard is closed, and the actuator is inserted, turned, and interlocked by the personal key.

## 10.2 Example

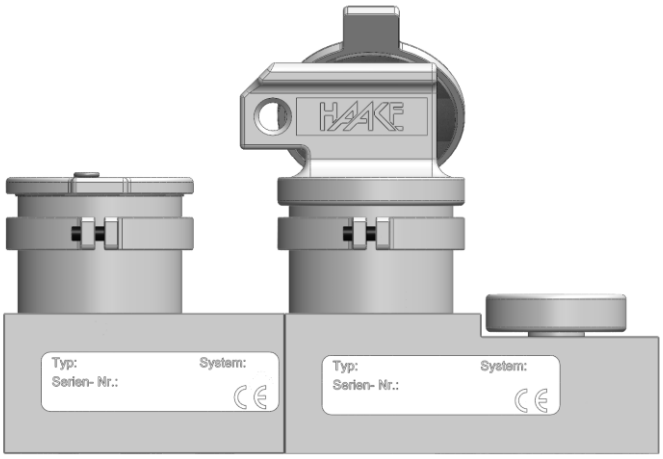


Guard-locking mechanism closed:
The actuator and the personal key cannot be removed.

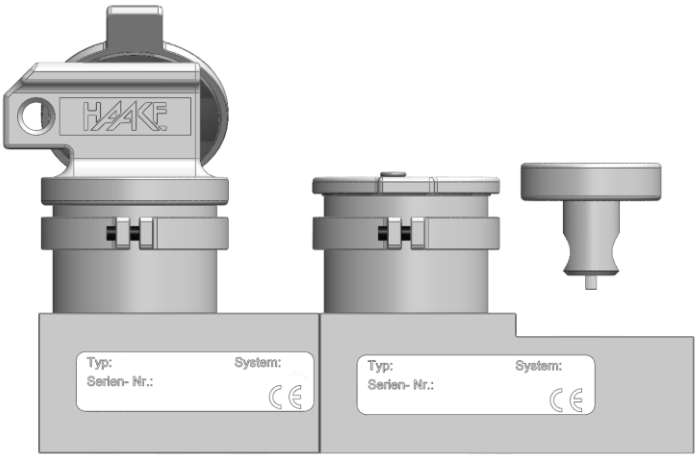


Guard-locking mechanism open:
The access key cannot be removed.

Figure shows HST-TZ2 Ident.-No.: 10242

# 11 Safety measures

## 11.1 Organisational measures

Persons who have been authorised to carry out tasks involving the installation or removal of the component must have read and understood this manual prior to commencing such tasks.
The operator of the plant or machine has an obligation to ensure the installation and de-installation is carried out safely and with no hazards by implementing appropriate safety measures.

## 11.2 Safety of persons

Personnel responsible for installation or removal tasks have to be suitably skilled or else have to be instructed by suitably skilled persons. On account of their technical training and experience, such skilled persons have sufficient knowledge of the installation or machine. These persons are sufficiently familiar with the applicable domestic work protection and accident prevention regulations of relevance here, that they are able to assess the operational safety of the installation or machine.
It is necessary to implement accident- and fall-prevention measures, whenever tasks are performed or areas are traversed at height.

## 11.3 Operating conditions and limitations of use

Please note the **intended use** (cf. section 2) and the **technical information** (cf. section 19) described in this manual.

## 11.4 Assembly

Before beginning installation, ensure that the component is intended and suitable for the particular installation site, based on the information on the type label. Always carry out a function test after installation.
Do not make any alterations to the installation after the function test has been successfully carried out.

## 11.5 Repairs / Alterations

Do not carry out any repairs to the component. Do not replace or exchange any parts. Send damaged or faulty components to Haake Technik GmbH to be repaired.
Do not make any alterations to the component. Otherwise, this could lead to malfunctions, which can cause serious personal injury and irreparable damage to property.

In the event of non-compliance, the guarantee is invalidated and Haake Technik GmbH does not accept any liability.

# 12 Installation



**Attention!**

**When installing the component, choose a means of attachment that cannot easily be detached (e.g. riveting or safety screws).**

## 12.1 Preparation

Before beginning installation, ensure that the identification number given in this installation and operation manual corresponds to the identification number of the component.

Installing the component requires the following items that are **not** included in the scope of the delivery:

HST-TZ2 Ident.-No.: 10242 and HST-TZ2 Ident.-No.: 10243:

- 4 screws M8 x “length of relevant installation site“ from A2-70
- 2 M6 safety screws + “length of relevant installation site” from A2-70
- Screw locking devices (toothed lock washers, disc springs, shaft washers, or screw adhesive)

HST-TZ2 Ident.-No.: 10244 and HST-TZ2 Ident.-No.: 10245:

- 2 screws M6 x “length of relevant installation site“ from A2-70
- 2 screws M8 x “length of relevant installation site“ from A2-70
- 2 M6 safety screws + “length of relevant installation site” from A2-70
- Screw locking devices (toothed lock washers, disc springs, shaft washers, or screw adhesive)

Clean the work environment by removing dirt, grease and oil.

## 12.2 General approach

Use suitable tools when installing the component. Otherwise, bolts and nuts may become damaged and unusable.
When tightening the screws listed in section 12.1, do not exceed the max. tightening torque.
Use the items listed in section 12.1 to secure the screw connections.

## 12.3 Installation instructions

Make the mounting holes according to the design of the component. The mounting holes should be arranged as shown in the diagrams (cf. section 20: **Dimensions**) and the drilling template.

The casing and the casing with the blocking mechanism, each with an integrated lock, are to be attached to the fixed part of the separating safeguard (for example, on the frames of the protective door or flap).
The actuator is to be attached on the moving part of the separating safeguard.

Care is to be taken that the casing for the guard-locking mechanism is not used as a stop for the moving part of the separating safeguard

No liability is accepted in the event of improper installation!

## 13 Performance check



**Attention!**

**The protective effectiveness of the component must be checked regularly**
**- at least once a year**
**or**
**- in intervals according to national operating instructions**

**Once installed, do not loosen any bolts or nuts or remove any pins; otherwise, the effectiveness of the safety-related functions is no longer guaranteed.**

Once finished with installation tasks, carry out the following inspections:

- Check all bolted connections for tightness and ensure that the bolts cannot come loose by themselves.
- Check whether the component is stuck.
- Check whether all keys can be inserted and turned easily.
- Check whether the safety-relevant functions (cf. section 7) are ensured.
- Record the results of performance check.

## 14 Operation



**Attention!**

**Never operate the key with extended lever arms. This may destroy the inner components and disable the safety function.**

**Do not attempt to unlock the component with objects other than the corresponding keys.**

**Do not ever attempt to insert or remove a key by applying excessive force or with the aid of a tool (hammer).**

### 14.1 Opening the separating safeguard

- Insert the release key into the lock and turn it until the stop (see section 10).
- Turn the actuator until the stop.
- Remove the actuator from the casing with the blocking mechanism. The separating safeguard can be opened; the release key is secured against removal.

### 14.2 Interlocking the separating safeguard

- Insert the actuator until the stop in the opening of the casing with the blocking mechanism and turn it until the stop.
- Insert the personal key and turn it until the stop (see section 10). The actuator is now secured against removal.
- Turn the release key until the stop and remove the key. The personal key is secured against removal.

## 15 Maintenance



**Attention!**

**Adapt the frequency of checks to the environmental conditions at the application site.**

**No maintenance of the internal parts of the component is required.**

We recommend the following maintenance measures:

- Check the component at regular intervals (at least once a year) for external damage.
- Check the protective dust cover is securely in place and the seal is functioning.

Damaged or faulty devices must be replaced.

## 16 Cleaning

No cleaning is required, as a rule.



**Attention!**

**In dusty environments (e.g. cement dust, colour dust), only clean the component with compressed air.**

**Only use other cleaning methods after prior consultation with the manufacturer.**

## 17 De-installation



**Attention!**

**Only uninstall the component when power to the electrical system is switched off.**

Loosen the attachment of the HST-TZ2 depending on the version.

1. Loosen the fastening screws of the casing with the blocking mechanism.
2. Loosen the alternative fastening for the actuator selected by you (e.g. riveting, safety screws by drilling them out).

## 18 Troubleshooting

| Fault | Possible cause | Remedy |
|---|---|---|
| The key cannot be inserted/ turned. | Wrong key / wrong coding. | Check labelling on the key and on the component. |
| | Deformed key. | Check key. Contact Haake Technik GmbH in case of deformation. |
| | Key inserted incorrectly. | Remove the key and if necessary insert it rotated 180°. |
| | Mechanical fault. | Contact Haake Technik GmbH. |
| Personal key cannot be removed. | Release key is not turned until the stop in the end position. | Turn the release key until the stop. |
| | The position of the casing to the actuator has changed. | Realign the actuator and check it is secure. |
| Actuator cannot be removed. | Personal key is not turned and removed. | Turn the personal key until the stop and remove it. |
| | The position of the casing to the actuator has changed. | Realign the actuator and check it is secure. |
| Lock can only be operated with difficulty. | Mechanism is stiff. | Clean (cf. section 16)<br>If necessary contact Haake Technik GmbH. |
| | The position of the casing to the actuator has changed. | Realign the actuator and check it is secure. |
| Safety-relevant function (cf. section 7) not fulfilled. | | Contact Haake Technik GmbH. |
| Release key cannot be removed. | Mechanical fault. | Contact Haake Technik. |
| | Requirements for the key release are not fulfilled. | Follow the instructions in section 14.2. |
| Lost key. | | Contact Haake Technik GmbH. |

## 19 Technical data

| | |
|---|---|
| Environment: | Indoor / outdoor |
| Temperature range: | -25 °C to +80 °C |
| Humidity: | to 100% (standard climate) |
| Material: | stainless steel |
| Ambient atmosphere: | industrial environments |
| Mounting position: | all positions |
| Mechanical service life: | 280,000 actuations |
| Service life: | 15 years |
| Mean Time To Failure ($MTTF_d$): | 150 years |
| Locking pressure: | 4000 N |

## 20 Dimensions

Dimensional specifications in mm

HST-TZ2 Ident.-No.: 10242

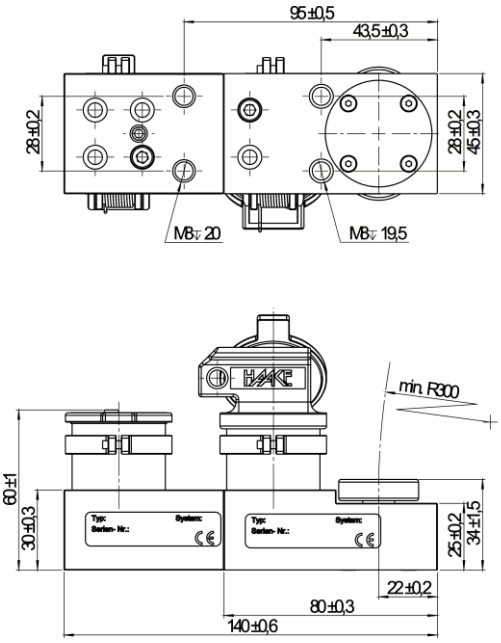


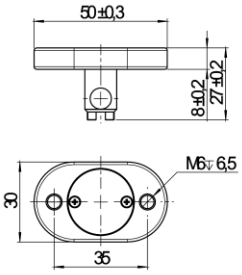


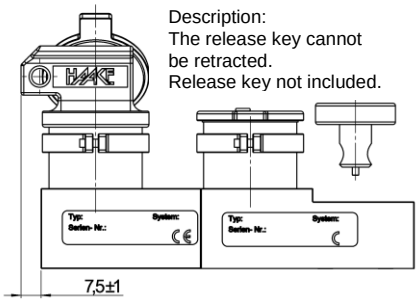


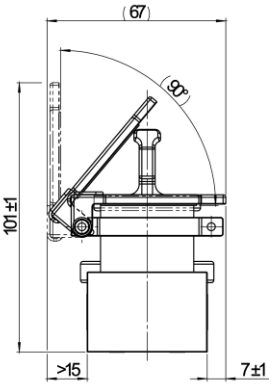


HST-TZ2 Ident.-No.: 10243

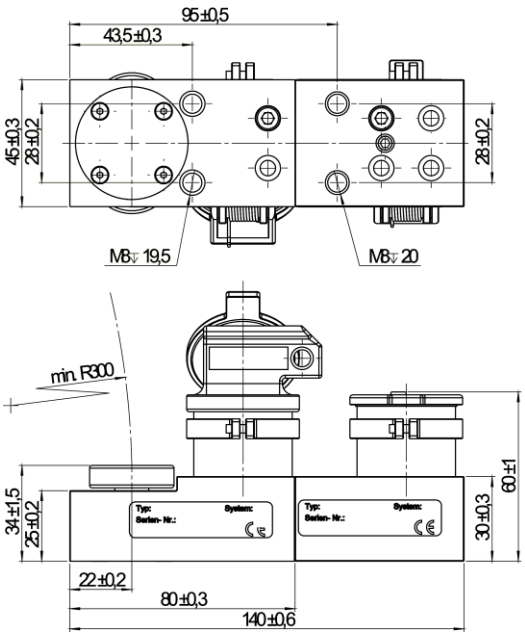


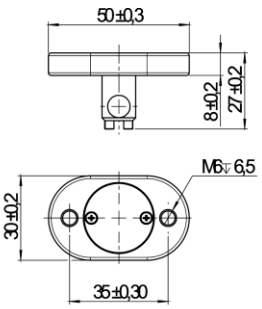


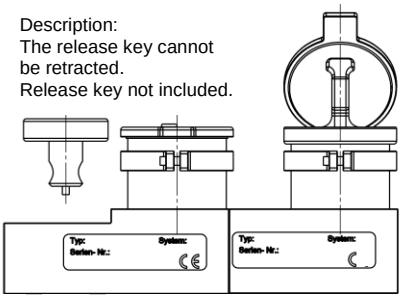


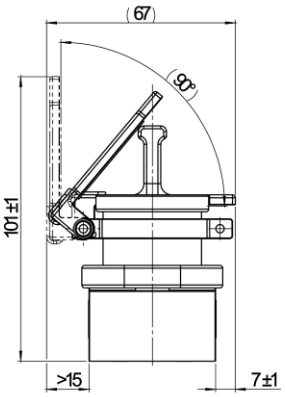

HST-TZ2 Ident.-No.: 10244

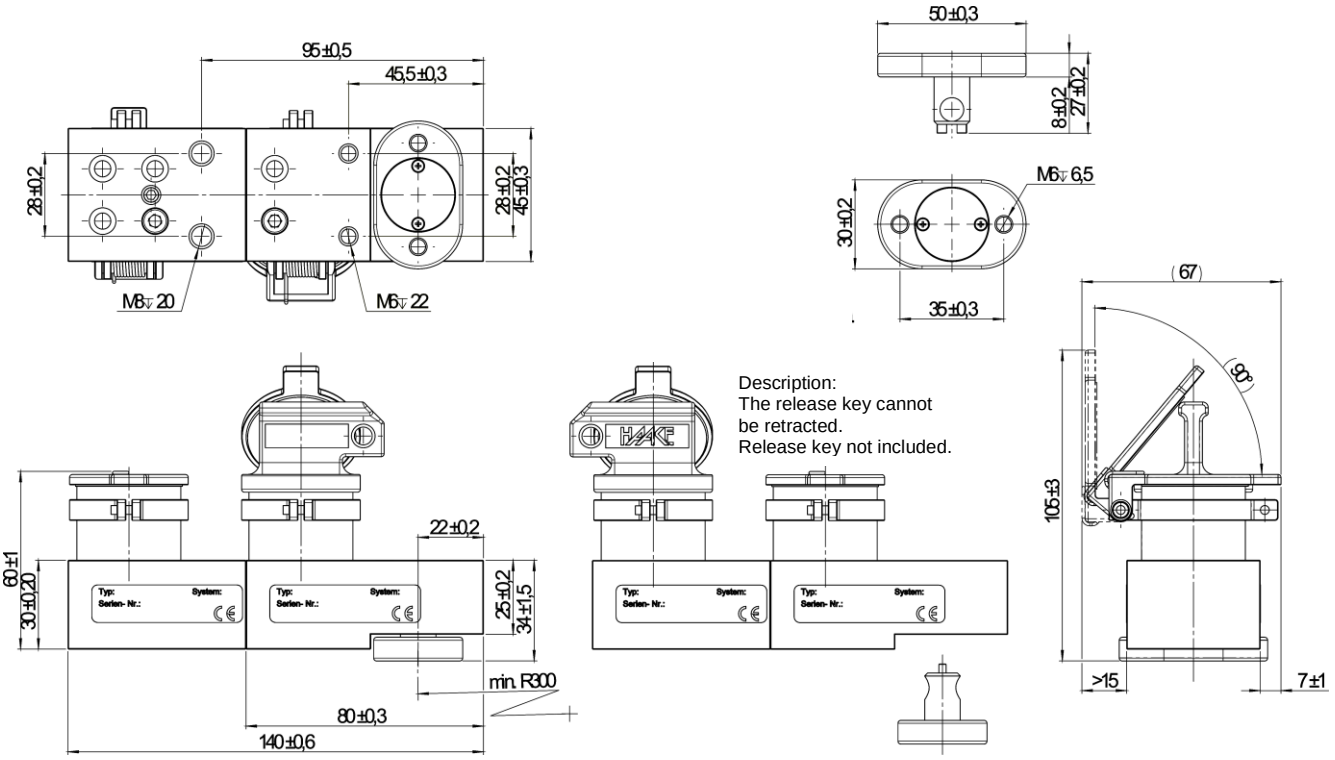


HST-TZ2 Ident.-No.: 10245

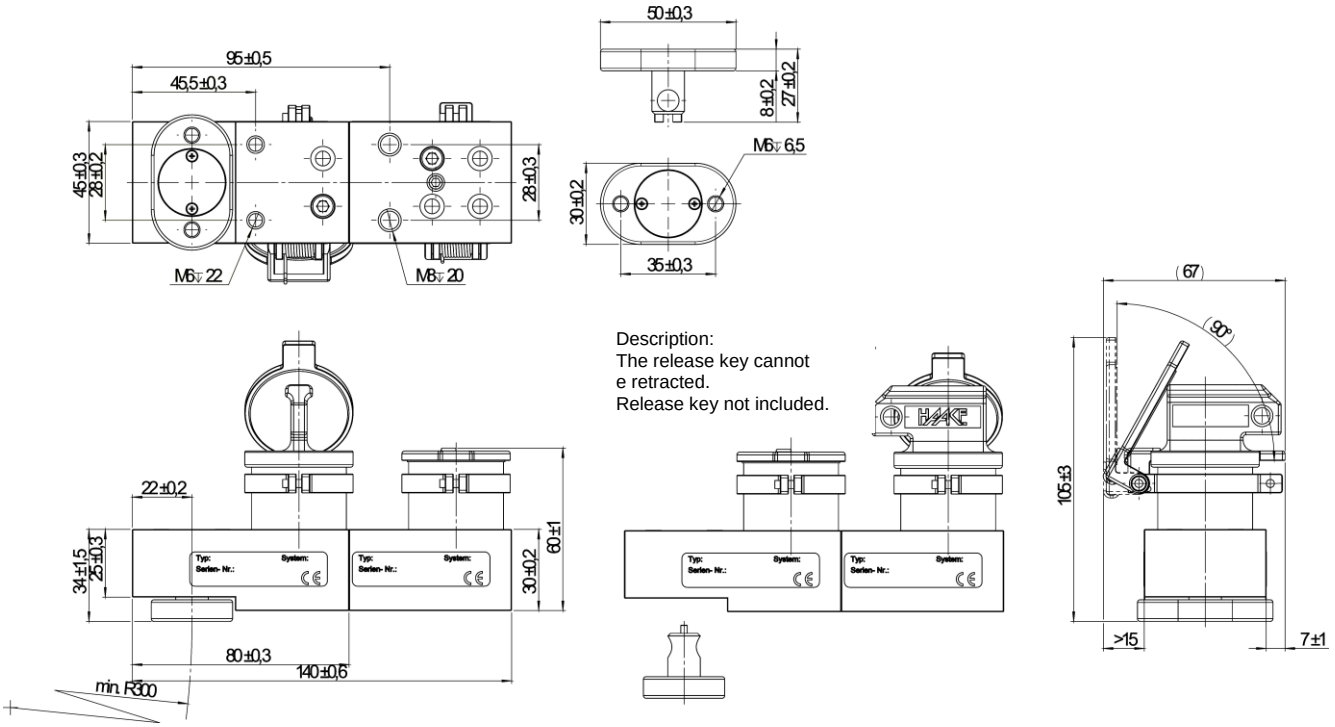

## 21 EC Declaration of Conformity

**EC Declaration of Conformity**
**in accordance with EC Directive 2006/42/EC Annex II 1. A**

| | |
|---|---|
| The company: | **Haake Technik GmbH**<br>**Master Esch 72**<br>**48691 Vreden** |
| hereby declares<br>that the safety components: | **Guard-locking mechanism** |
| Type: | **HST-TZ2** |
| Serial Number: | **see information on the product** |

in the delivered version is in accordance with the following relevant regulations:

| | |
|---|---|
| EC Directives: | **Directive on machinery 2006/42/EC** |
| Test Specification: | **GS-ET 31**<br>**Principles of testing and certification for**<br>**Interlocking devices with key transfer systems** |

The HST-TZ2 guard-locking mechanism with actuator and personal key controls access and can be used with accessible protective separators such as swinging and sliding doors or flaps.

Our quality assurance system ensures that all safety components are manufactured with the same quality.
Therefore the Declaration of Conformity issued applies for all safety components of the above types produced from serial number 1134933.

Authorized representative to compile the technical documentation is:

HAAKE Technik GmbH
Herr Jens Schoppen
Master Esch 72
48691 Vreden

Vreden, 07.12.2012

André Haake
(General Manager)

HAAKE Technik GmbH; Master Esch 72; 48691 Vreden
Phone: (02564) 39650 Fax: (02564) 396590

Haake Technik GmbH
Master Esch 72
48691 Vreden, Germany
info@haake-technik.com
www.haake-technik.com
Tel.: +49 2564 39650
Fax: +49 2564 396590