Installation and Operating Manual for Components

HST®-TZ1

Guard-locking mechanism
(Translation of Original Manual)

HST-TZ1 Ident.-No.: 10234

HST-TZ1 Ident.-No.: 10235

HST-TZ1 Ident.-No.: 10236

HST-TZ1 Ident.-No.: 10237

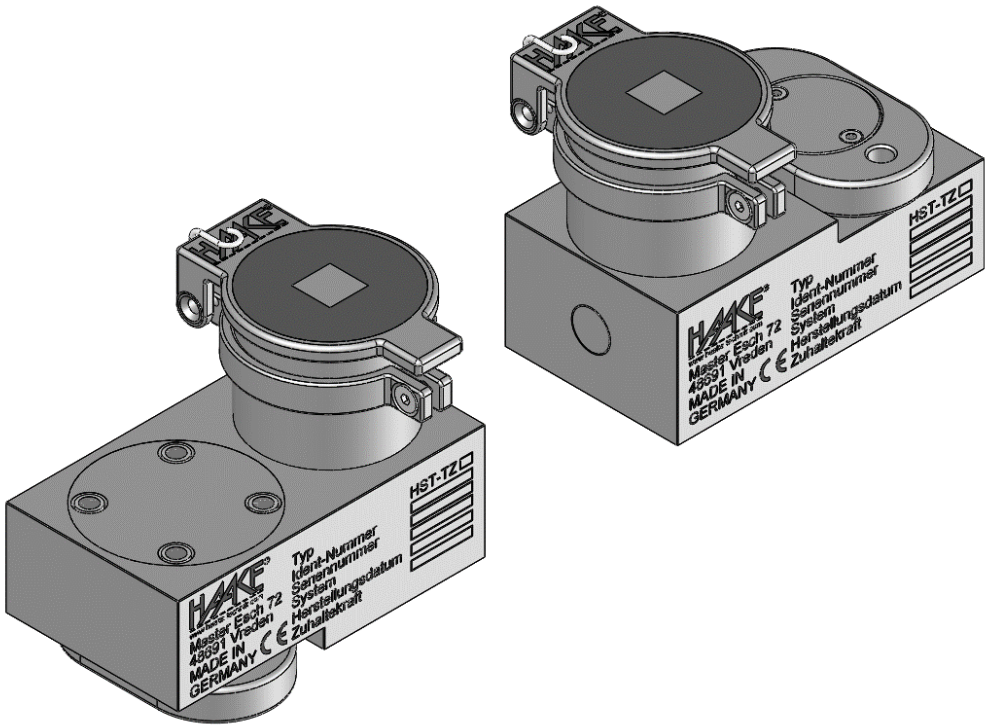

HST-TZ1, pictured Ident-No. 10234 and 10237
The image may differ from the product.

Read the operating manual before beginning any work!

Haake Technik GmbH
Master Esch 72
48691 Vreden, Germany
info@haake-technik.com
www.haake-technik.com
Tel.: +49 2564 39650
Fax: +49 2564 396590

Doc-ID. 411965
10-2016

This installation and operating manual contains proprietary information, which is subject to copyright. No parts of this documentation may be reproduced or transferred in any manner or by any means, be it electronic or mechanical, for any purpose without obtaining prior written consent.
Haake Technik GmbH assumes no liability for damage or subsequent damage, arising from the use of components or replacement parts, which are not original parts.
Haake and HST are registered trademarks of Haake Technik GmbH. All other brand and product names not mentioned here are or may be registered trademarks and are to be treated accordingly.

© Haake Technik GmbH, Master Esch 72, 48691 Vreden, Germany
All rights reserved.

Contents

1 Scope ... 3
2 Intended use ... 3
3 Symbol Explanation ... 3
4 Disposal ... 3
5 Foreseeable misuse ... 4
6 Identification ... 4
7 Safety-relevant function ... 4
8 Fault exclusions ... 5
9 Scope of delivery ... 6
10 Structure and function ... 7
10.1 Description ... 7
10.2 Example ... 7
11 Safety measures ... 8
11.1 Organisational measures ... 8
11.2 Safety of persons ... 8
11.3 Operating conditions and limitations of use ... 8
11.4 Assembly ... 8
11.5 Repairs / Alterations ... 8
12 Installation ... 9
12.1 Preparation ... 9
12.2 General approach ... 9
12.3 Installation instructions ... 9
13 Performance check ... 10
14 Operation ... 10
14.1 Opening the separating safeguard ... 10
14.2 Interlocking the separating safeguard ... 10
15 Maintenance ... 11
16 Cleaning ... 11
17 De-installation ... 11
18 Troubleshooting ... 12
19 Technical data ... 12
20 Dimensions ... 13
21 EC Declaration of Conformity ... 15

1 Scope

This installation and operating manual is intended for persons who have been authorized to carry out tasks involving the installation or operation of the HST-series. International, national and, where appropriate, regional regulations are to be observed when handling key transfer systems.

If you have any questions which are not answered in this manual, please get in touch with your regional customer service centre or else make direct contact with

Haake Technik GmbH
Master Esch 72, 48691 Vreden, Germany
Telephone +49 2564 39650
Fax +49 2564 396590
Info@haake-technik.com

2 Intended use

The Guard-locking mechanism HST-TZ1 with an adjacent Actuator serves as access protection and can be used on separating safeguards such as swing doors and sliding doors or flaps. The Actuator can be removed by operating the HST-TZ1, whereby the safeguard can be opened.

In conjunction with other components (key transfer system), it can be ensured that no danger areas can be reached after opening the safeguard.

Other applications are prohibited.

3 Symbol Explanation

Warnings are indicated by symbols. The notices are introduced by signal words to indicate the extent of the hazard.



Attention!

… indicates a potentially hazardous situation, which may lead to personal injury and damage to property if it is not avoided.



NOTE!

… highlights useful tips and recommendations as well as information for efficient and fault-free operation.

4 Disposal



The device must be properly disposed of in accordance with national laws and regulations.

5 Foreseeable misuse

Never operate the keys with extended lever arms. This can damage the internal components and may render the safety function inoperative. Do not attempt to unlock the component with objects other than the corresponding keys.
Do not attempt to insert or remove a key by applying excessive force or with the aid of a tool (hammer)



Attention!

In rear access safeguards it cannot be excluded that a person will be in the danger area when the safeguard is closed and guard-locking by the HST-TZ1 is effective. For such cases, a Guard-locking mechanism with a second key (personal key) is to be used.

6 Identification

You can find the model designation and serial number on the component's type label for exact identification.
If the component is part of a key transfer system, this information, except for the serial number, can also be found on the key plan.
Note these details (prior to installation, if necessary), so that they can be provided in case of questions or for ordering spare parts.

7 Safety-relevant function

The safety-relevant function is performed according to the following requirements:

1. No removal of the Actuator for coded keys, which are not inserted and turned.
2. No removal of the key for an Actuator, which is not inserted and interlocked.

8 Fault exclusions

Due to the construction, materials, and components used for the component, the faults listed in the table can be excluded:

Potential Fault	Exclusion of Fault	Limitations of Use	Reason
Wear, corrosion.	Permissible acc. To tables A.4 and A.5 of DIN EN ISO 13849-2.	See sections 2 **Intended use** and sections 19 **Technical data**.	Use of carefully selected materials and manufacturing processes; use of proven springs and special mounting methods.
Non-tightening /Loosening (parts of the component).	Permissible acc. To tables A.4 and A.5 of DIN EN ISO 13849-2.	See section 2 **Intended use**.	Use of carefully selected materials and manufacturing processes; use of proven springs and special mounting methods.
Weakening of force due to permanent deformation or fracture.	Permissible acc. To table A.5 of DIN EN ISO 13849-2.	See section 14 **Operation**.	Use of proven springs and special mounting methods.
Fracture, deformation due to excessive load.	Permissible acc. To tables A.4 and A.5 of DIN EN ISO 13849-2.	See section 14 **Operation**.	Use of carefully selected materials; over dimensioning using safety factor 2 and replication of parts; use of proven springs and special mounting methods.
Stiffness/Getting stuck.	Permissible acc. To tables A.4 and A.5 of DIN EN ISO 13849-2.	See sections 2 **Intended use** and sections 14 **Operation**.	Use of carefully selected materials; over dimensioning using safety factor 2 and replication of parts; use of proven springs and special mounting methods.

9 Scope of delivery

1 x Guard-locking mechanism HST-TZ1 consisting of a casing with a Blocking mechanism, an integrated lock and an adjacent actuator (actuator interlocked in protection position).

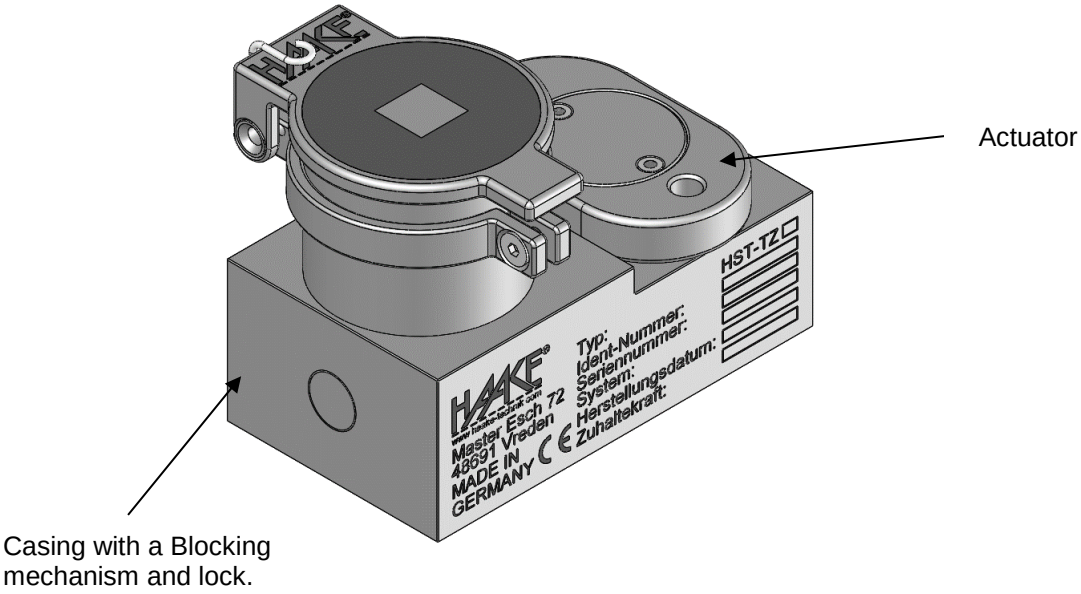

Figure shows HST-TZ1 Ident.-No.: 10234

NOTE!

*Means of attachment and properly coded key are **not** included in the scope of the delivery.*

10 Structure and function

10.1 Description

The Guard-locking mechanism consists of casing with a Blocking mechanism, an integrated lock and an Actuator. To remove the Actuator the coded key is inserted and turned in the lock.
The Actuator can then be turned and removed.
The Guard-locking mechanism HST-TZ1 ensures that the safeguard cannot be opened before the key is inserted and turned, when the safeguard is closed and the Actuator is locked.

10.2 Example

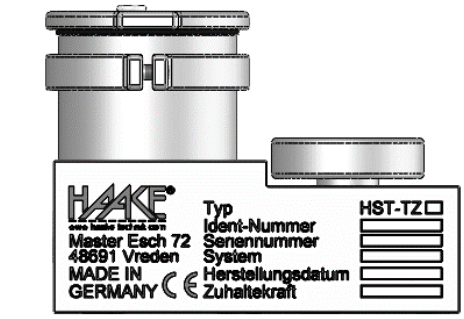

Guard-locking mechanism closed:
The Actuator is secured against removal.

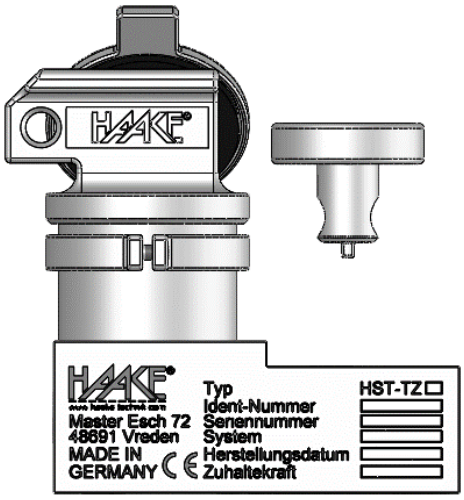

Guard-locking mechanism open:
Keys secured against removal.

Figure shows HST-TZ1 Ident.-No.: 10234

11 Safety measures

11.1 Organisational measures

Persons who have been authorised to carry out tasks involving the installation or removal of the component must have read and understood this manual prior to commencing such tasks.
The operator of the plant or machine has an obligation to ensure the installation and de-installation is carried out safely and with no hazards by implementing appropriate safety measures.

11.2 Safety of persons

Personnel responsible for installation or removal tasks have to be suitably skilled or else have to be instructed by suitably skilled persons. On account of their technical training and experience, such skilled persons have sufficient knowledge of the installation or machine. These persons are sufficiently familiar with the applicable domestic work protection and accident prevention regulations of relevance here, that they are able to assess the operational safety of the installation or machine.
It is necessary to implement accident- and fall-prevention measures, whenever tasks are performed or areas are traversed at height.

11.3 Operating conditions and limitations of use

Please note the **intended use** (cf. section 2) and the **technical information** (cf. section 19) described in this manual.

11.4 Assembly

Before beginning installation, ensure that the component is intended and suitable for the particular installation site, based on the information on the type label. Always carry out a function test after installation.
Do not make any alterations to the installation after the function test has been successfully carried out.

11.5 Repairs / Alterations

Do not carry out any repairs to the component. Do not replace or exchange any parts. Send damaged or faulty components to Haake Technik GmbH to be repaired.
Do not make any alterations to the component. Otherwise, this could lead to malfunctions, which can cause serious personal injury and irreparable damage to property.

In the event of non-compliance, the guarantee is invalidated and Haake Technik GmbH does not accept any liability.

12 Installation



Attention!

When installing the component, choose a means of attachment that cannot easily be detached (e.g. riveting or safety screws).

12.1 Preparation

Before beginning installation, ensure that the identification number given in this installation and operation manual corresponds to the identification number of the component.

Installing the component requires the following items that are **not** included in the scope of the delivery:

HST-TZ1 Ident.-No.: 10234 and HST-TZ1 Ident.-No.: 10235:

- 2 screws M8 x “length of relevant installation site“ from A2-70
- 2 M6 safety screws + “length of relevant installation site” from A2-70
- Screw locking devices (toothed lock washers, disc springs, shaft washers, or screw adhesive)

HST-TZ1 Ident.-No.: 10236 and HST-TZ1 Ident.-No.: 10237:

- 2 screws M6 x “length of relevant installation site“ from A2-70
- 2 M6 safety screws + “length of relevant installation site” from A2-70
- Screw locking devices (toothed lock washers, disc springs, shaft washers, or screw adhesive)

Clean the work environment by removing dirt, grease and oil.

12.2 General approach

Use suitable tools when installing the component. Otherwise, bolts and nuts may become damaged and unusable.
When tightening the screws listed in section 12.1, do not exceed the max. tightening torque.
Use the items listed in section 12.1 to secure the screw connections.

12.3 Installation instructions

Make the mounting holes according to the design of the component. The mounting holes should be arranged as shown in the diagrams (cf. section 20: **Dimensions**) and the drilling template.

The casing with a Blocking mechanism and integrated lock is to be attached on the stable part of the separating safeguard (for example on the frames of the protective door or flap).
The Actuator is to be attached to the moving part of the separating safeguard.
Care must be taken that the casing with the Blocking mechanism and lock are not used as a stop for the moving part of the separating safeguard

No liability is accepted in the event of improper installation!

13 Performance check



Attention!

The protective effectiveness of the component must be checked regularly
- at least once a year
or
- in intervals according to national operating instructions

Once installed, do not loosen any bolts or nuts or remove any pins; otherwise, the effectiveness of the safety-related functions is no longer guaranteed.

Once finished with installation tasks, carry out the following inspections:

- Check all bolted connections for tightness and ensure that the bolts cannot come loose by themselves.
- Check whether the component is stuck.
- Check whether all keys can be inserted and turned easily.
- Check whether the safety-relevant functions (cf. section 7) are ensured.
- Record the results of performance check.

14 Operation



Attention!

Never operate the key with extended lever arms. This may destroy the inner components and disable the safety function.

Do not attempt to unlock the component with objects other than the corresponding keys.

Do not ever attempt to insert or remove a key by applying excessive force or with the aid of a tool (hammer).

14.1 Opening the separating safeguard

- Insert the key in the lock and turn it to the stop. Turn the Actuator until the stop.
- Remove the Actuator from the casing with the Blocking mechanism. The separating safeguard can be opened; the key is secured against removal.

14.2 Interlocking the separating safeguard

- Insert the Actuator to the stop in the opening of the casing and turn it until the stop.
- Turn the key until the stop and remove the key.

15 Maintenance



Attention!

Adapt the frequency of checks to the environmental conditions at the application site.

No maintenance of the internal parts of the component is required.

We recommend the following maintenance measures:

- Check the component at regular intervals (at least once a year) for external damage.
- Check the protective dust cover is securely in place and the seal is functioning.

Damaged or faulty devices must be replaced.

16 Cleaning

No cleaning is required, as a rule.



Attention!

In dusty environments (e.g. cement dust, colour dust), only clean the component with compressed air.

Only use other cleaning methods after prior consultation with the manufacturer.

17 De-installation



Attention!

Only uninstall the component when power to the electrical system is switched off.

Loosen the attachment of the HST-TZ1 depending on the version.

1. Loosen the fastening screws of the casing with the blocking mechanism.
2. Loosen the alternative fastening selected by you (e.g. riveting, safety screws by drilling them out).

18 Troubleshooting

Fault	Possible cause	Remedy
The key cannot be inserted/ turned.	Wrong key / wrong coding.	Check labelling on the key and on the component.
	Deformed key.	Check key. Contact Haake Technik GmbH in case of deformation.
	Key inserted incorrectly.	Remove the key and if necessary insert it rotated 180°.
	Mechanical fault.	Contact Haake Technik GmbH.
Actuator cannot be removed.	Key is not turned to the stop at the end position.	Turn the key until the stop.
	The position of the casing to the Actuator has changed.	Realign the Actuator and check it is secure.
Lock can only be operated with difficulty.	Mechanism is stiff.	Clean (cf. section 16) If necessary contact Haake Technik GmbH.
	The position of the casing to the Actuator has changed.	Realign the Actuator and check it is secure.
Safety-relevant function (cf. section 7) not fulfilled.		Contact Haake Technik GmbH.
You cannot remove the key.	Mechanical fault.	Contact Haake Technik GmbH.
	Actuator has not been turned to the stop at the end position.	Turn the Actuator until the stop.
	The position of the casing to the Actuator has changed.	Realign the Actuator and check it is secure.
Lost key.		Contact Haake Technik GmbH.

19 Technical data

Environment:	Indoor / outdoor
Temperature range:	-25 °C to +80 °C
Humidity:	to 100% (standard climate)
Material:	stainless steel
Ambient atmosphere:	industrial environments
Mounting position:	all
Mechanical service life:	280,000 actuations
Service life:	15 years
Mean Time To Failure ($MTTF_d$):	150 years
Locking pressure:	4000 N

20 Dimensions

Dimensional specifications in mm.

HST-TZ1 Ident.-No.: 10234

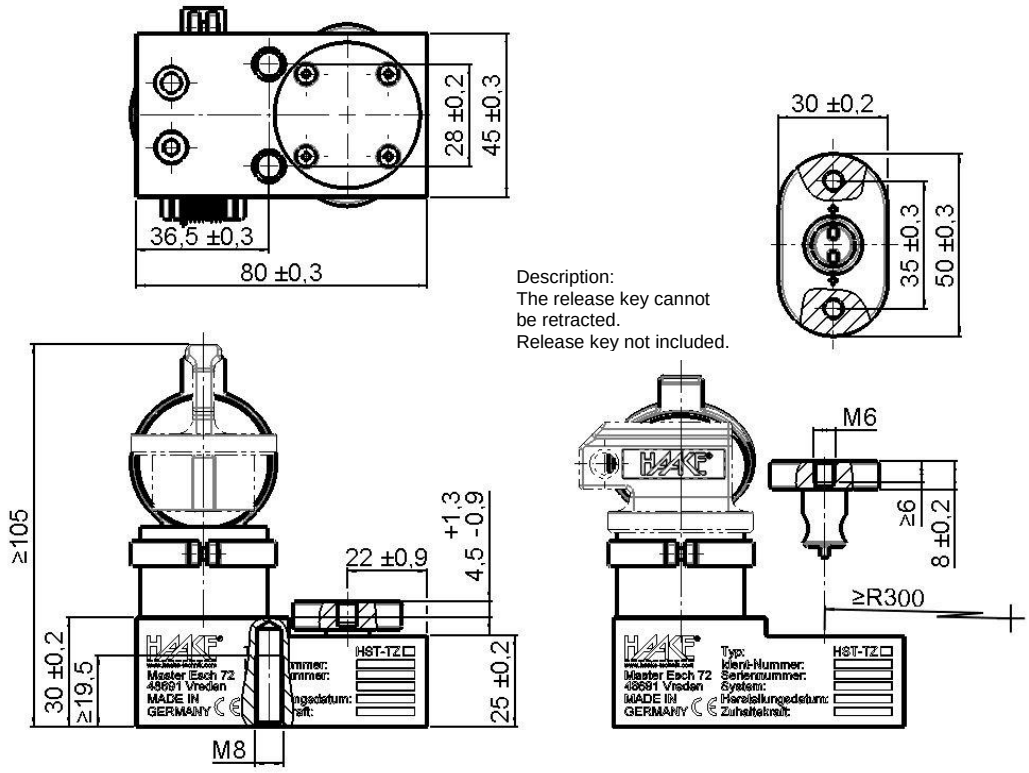

HST-TZ1 Ident.-No.: 10235

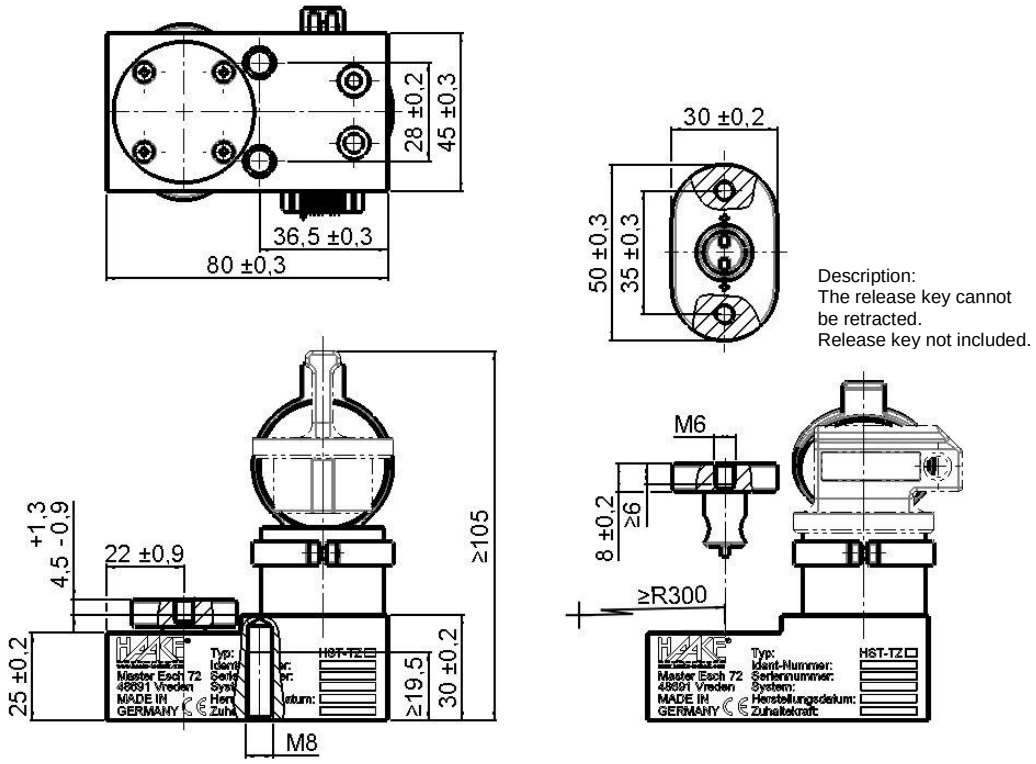

HST-TZ1 Ident.-No.: 10236

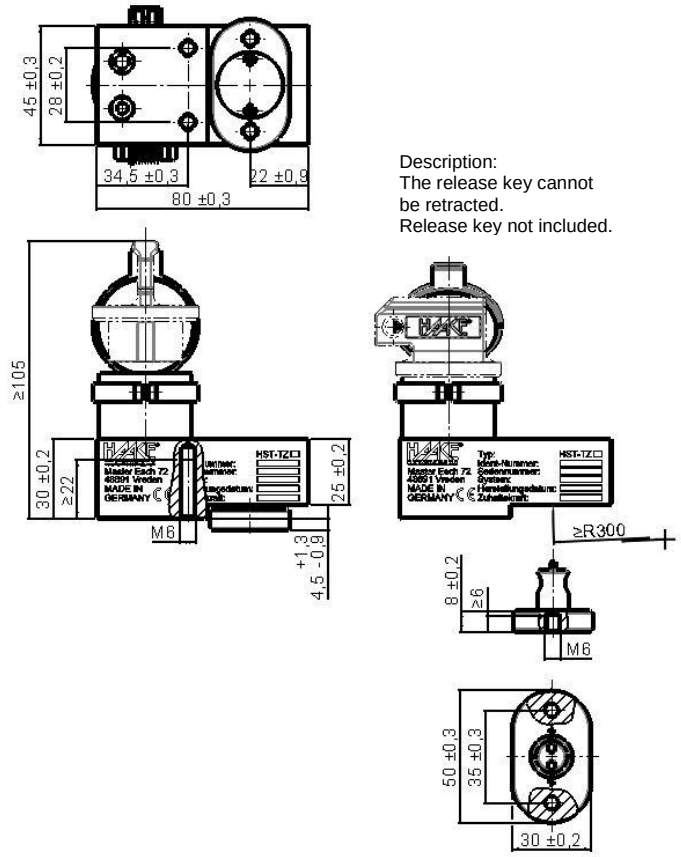

Description:
The release key cannot be retracted.
Release key not included.

HST-TZ1 Ident.-No.: 10237

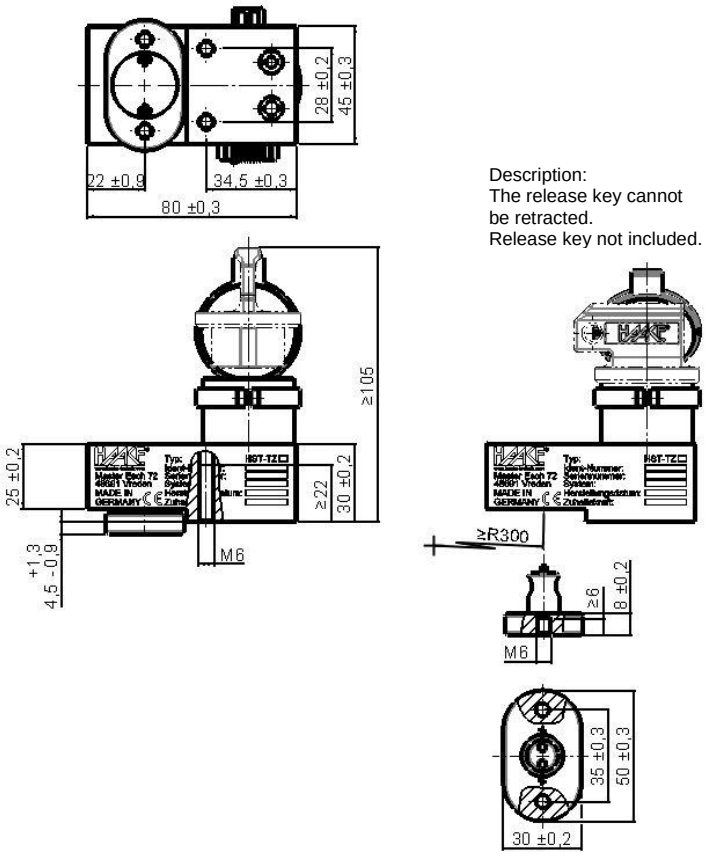

Description:
The release key cannot be retracted.
Release key not included.

21 EC Declaration of Conformity

EC Declaration of Conformity
in accordance with EC Directive 2006/42/EC Annex II 1. A

The company:	**Haake Technik GmbH** **Master Esch 72** **48691 Vreden**
hereby declares that the safety components:	**Guard-locking mechanism**
Type:	**HST-TZ1**
Serial Number:	**see information on the product**

in the delivered version is in accordance with the following relevant regulations:

EC Directives:	**Directive on machinery 2006/42/EC**
Test Specification:	**GS-ET 31** **Principles of testing and certification for** **Interlocking devices with key transfer systems**

The HST-TZ1 guard-locking mechanism with actuator controls access and can be used with protective separators such as swinging and sliding doors or flaps.

Our quality assurance system ensures that all safety components are manufactured with the same quality.
Therefore the Declaration of Conformity issued applies for all safety components of the above types produced from serial number 1130505.

Authorized representative to compile the technical documentation is:

HAAKE Technik GmbH
Herr Jens Schoppen
Master Esch 72
48691 Vreden

Vreden, 07.12.2012

André Haake
(General Manager)

HAAKE Technik GmbH; Master Esch 72; 48691 Vreden
Phone: (02564) 39650 Fax: (02564) 396590



Haake Technik GmbH
Master Esch 72
48691 Vreden, Germany
info@haake-technik.com
www.haake-technik.com
Tel.: +49 2564 39650
Fax: +49 2564 396590