Installation and Operating Manual for Components

HST®-M1

Switching element with locking mechanism

(Translation of Original Manual)

HST-M1 Ident.-No.: 10213
HST-M1 Ident.-No.: 10215
HST-M1 Ident.-No.: 10216
HST-M1 Ident.-No.: 10217
HST-M1 Ident.-No.: 10219
HST-M1 Ident.-No.: 10624
HST-M1 Ident.-No.: 10220
HST-M1 Ident.-No.: 10625

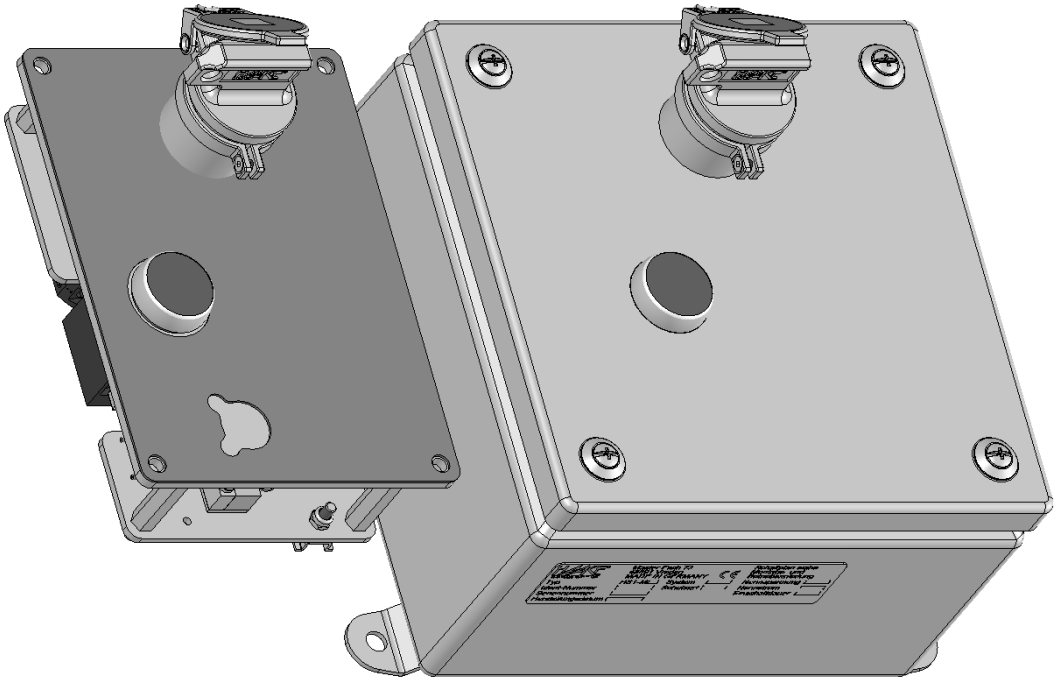

Figure shows HST-M1 Ident.-No.: 10213 und 10219
The image may differ from the product.

Read the operating manual before beginning any work!

Haake Technik GmbH
Master Esch 72
48691 Vreden, Germany
info@haake-technik.com
www.haake-technik.com
Tel.: +49 2564 39650
Fax: +49 2564 396590

Doc-ID. 411955
04-2015

This installation and operating manual contains proprietary information which is subject to copyright. No parts of this documentation may be reproduced or transferred in any manner or by any means, be it electronic or mechanical, for any purpose without obtaining prior written consent.
Haake Technik GmbH assumes no liability for damage or subsequent damage, arising from the use of components or replacement parts which are not original parts.
Haake and HST are registered trademarks of Haake Technik GmbH. All other brand and product names not mentioned here are or may be registered trademarks and are to be treated accordingly.

© Haake Technik GmbH, Master Esch 72, 48691 Vreden, Germany
All rights reserved.

Contents

1 Scope ... 3
2 Intended use ... 3
3 Symbol Explanation ... 3
4 Disposal ... 3
5 Foreseeable misuse ... 4
6 Identification ... 4
7 Safety-relevant function ... 4
8 Fault exclusions ... 5
9 Scope of delivery ... 6
10 Structure and function ... 6
10.1 Description ... 6
10.2 Example ... 7
11 Safety measures ... 8
11.1 Organisational measures ... 8
11.2 Safety of persons ... 8
11.3 Operating conditions and limitations of use ... 8
11.4 Assembly ... 8
11.5 Repairs / Alterations ... 8
11.6 Electrical equipment ... 8
12 Installation ... 9
12.1 Preparation ... 9
12.2 General approach ... 9
12.3 Installation instructions: ... 10
12.4 Electrical connection ... 12
13 Performance check ... 16
14 Operation ... 17
14.1 Inserting the key ... 17
14.2 Removing the key ... 17
15 Maintenance ... 17
16 Cleaning ... 18
17 De-installation ... 18
18 Troubleshooting ... 19
19 Technical data ... 20
20 Dimensions ... 21
21 EC Declaration of Conformity ... 22

1 Scope

This installation and operating manual is intended for persons who have been authorized to carry out tasks involving the installation or operation of the HST-series. International, national and, where appropriate, regional regulations are to be observed when handling key transfer systems.

If you have any questions which are not answered in this manual, please get in touch with your regional customer service centre or else make direct contact with

Haake Technik GmbH
Master Esch 72, 48691 Vreden, Germany
Telephone +49 2564 39650
Fax +49 2564 396590
Info@haake-technik.com

2 Intended use

The Switching element with locking mechanism HST-M1 is used to switch off the power supply to the load circuits of machines or plants with shut-off delays, with rated currents up to 20A, in accordance with the conditions of section 19, if the hazardous movements have been shut down.

Other applications are prohibited.

3 Symbol Explanation

Warnings are indicated by symbols. The notices are introduced by signal words to indicate the extent of the hazard.



Attention!

… indicates a potentially hazardous situation, which may lead to personal injury and damage to property if it is not avoided.



NOTE!

… highlights useful tips and recommendations as well as information for efficient and fault-free operation.

4 Disposal



The device must be properly disposed of in accordance with national laws and regulations.

5 Foreseeable misuse

Never operate the keys with extended lever arms. This can damage the internal components and may render the safety function inoperative.
Do not attempt to unlock the component with objects other than the corresponding keys.
Do not attempt to insert or remove a key by applying excessive force or with the aid of a tool (e.g. hammer).

6 Identification

You can find the model designation and serial number on the component's type label for exact identification.
If the component is part of a key transfer system, this information, except for the serial number, can also be found on the key plan.
Note these details (prior to installation, if necessary), so that they can be provided in case of questions or for ordering spare parts.

7 Safety-relevant function

The safety-relvant function is performed according to the following requirements:

1. No removal of the switch key in position 1 (cf. section 10.2).
2. No rotation of the switch key without the control voltage from the external security component.
3. No actuation of the switch without inserted, associated, coded switch key.

8 Fault exclusions

Due to the construction, materials, and components used for the component, the faults listed in the table can be excluded:

Potential Fault	**Exclusion of Fault**	**Limitations of Use**	**Reason**
Wear, corrosion.	Permissible acc. To tables A.4 and A.5 of DIN EN ISO 13849-2.	See sections 2 **Intended use** and sections 19 **Technical data**.	Use of carefully selected materials and manufacturing processes; use of proven springs and special mounting methods.
Non-tightening/Loosening (parts of the component).	Permissible acc. To tables A.4 and A.5 of DIN EN ISO 13849-2.	See section 2 **Intended use**.	Use of carefully selected materials and manufacturing processes; use of proven springs and special mounting methods.
Weakening of force due to permanent deformation or fracture.	Permissible acc. To table A.5 of DIN EN ISO 13849-2.	See section 14 **Operation**.	Use of proven springs and special mounting methods.
Fracture, deformation due to excessive load.	Permissible acc. To tables A.4 and A.5 of DIN EN ISO 13849-2.	See section 14 **Operation**.	Use of carefully selected materials; over dimensioning using safety factor 2 and replication of parts; use of proven springs and special mounting methods.
Stiffness/Getting stuck.	Permissible acc. To tables A.4 and A.5 of DIN EN ISO 13849-2.	See sections 2 **Intended use** and sections 14 **Operation**.	Use of carefully selected materials; over dimensioning using safety factor 2 and replication of parts; use of proven springs and special mounting methods.
Contacts do not open.	Switches with contacts open in accordance with EN 60947-3.	See: Technical information for the switch.	Approved switch in accordance with DIN EN ISO 13849-2.
Bypass of adjacent circuits, which are isolated from each other.	Bypass for switch can be excluded in accordance with EN 60947-3.	See: Technical information for the switch.	Approved switch in accordance with DIN EN ISO 13849-2.

9 Scope of delivery

Built-in version:

1 x switching element with locking mechanism HST-M1 incl. drilling template

Housing version:

1 x switching element with locking mechanism HST-M1 incl. set for wall mounting

1 x technical information for the inbuilt switch
1 x properly coded key



NOTE!

Means of attachment are not included in the scope of the delivery.

10 Structure and function

10.1 Description

The switching element with locking mechanism HST-M1 consists of a lock and a switch, which form an interlocking unit. The switching element serves to interrupt the power supply for the driving elements of a hazardous movement, the shut-off delay of which is so long that a locking mechanism prevents the switch key from being removed until the hazardous movement has been shut down.

In the versions HST-M1 Ident.-No.: 10219, 10624, 10220 and 10625, the switching element with locking mechanism is mounted in housings. The versions Ident.-No.: 10213, 10215, 10216 and 10217 are built-in versions.

If a control voltage of the external monitoring device (e.g. a standstill monitor), that registers the standstill of the hazardous movement, is present in the locking mechanism, then the switch key can be turned and removed (position 0) by pressing the illuminated green push button. The contacts, see circuit diagram section 12.4, must be integrated in the feedback circuit of the safety relay.

The position of the locking mechanism is monitored by a micro switch with positive opening operation of a contact element. The micro switch must be integrated into the machine control system so that it is only possible to switch on the machine or plant if the switch contacts of the micro switch are closed.

To interrupt the power supply to a machine or plant, the rotary switch must be connected so that, by changing from position 1 to position 0, the circuit to the drive unit of the machine or plant is opened. Please see the accompanying switch documentation for the contact pairing of the built-in switch.

10.2 Example

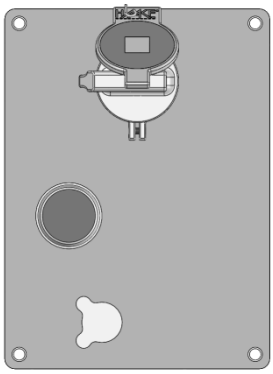

Position 1
Switch key blocked by locking mechanism. Key cannot be removed.

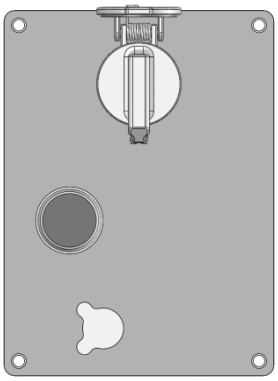

Position 0
Switch key unblocked and can be removed

Figure shows HST-M1 Ident.-No.: 10213

11 Safety measures

11.1 Organisational measures

Persons who have been authorised to carry out tasks involving the installation or removal of the component must have read and understood this manual prior to commencing such tasks.
The operator of the plant or machine has an obligation to ensure the installation and de-installation is carried out safely and with no hazards by implementing appropriate safety measures.

11.2 Safety of persons

Personnel responsible for installation or removal tasks have to be suitably skilled or else have to be instructed by suitably skilled persons. On account of their technical training and experience, such skilled persons have sufficient knowledge of the installation or machine. These persons are sufficiently familiar with the applicable domestic work protection and accident prevention regulations of relevance here, that they are able to assess the operational safety of the installation or machine.
It is necessary to implement accident- and fall-prevention measures, whenever tasks are performed or areas are traversed at height.

11.3 Operating conditions and limitations of use

Please note the **intended use** (cf. section 2) and the **technical information** (cf. section 19) described in this manual.

11.4 Assembly

Before beginning installation, ensure that the component is intended and suitable for the particular installation site, based on the information on the type label. Always carry out a function test after installation.
Do not make any alterations to the installation after the function test has been successfully carried out.

11.5 Repairs / Alterations

Do not carry out any repairs to the component. Do not replace or exchange any parts. Send damaged or faulty components to Haake Technik GmbH to be repaired.
Do not make any alterations to the component. Otherwise this could lead to malfunctions, which can cause serious personal injury and irreparable damage to property.

In the event of non-compliance, the guarantee is invalidated and Haake Technik GmbH does not accept any liability.

11.6 Electrical equipment

Electrical connections must only be carried out by qualified electricians who are familiar with all international, national, and, if applicable, regional electrical engineering regulations.
Work must only be carried out when the power supply has been shut off.

12 Installation



Attention!

When installing the component, choose a means of attachment that cannot easily be detached (e.g. riveting or safety screws).

12.1 Preparation

Before beginning installation, ensure that the identification number given in this installation and operation manual corresponds to the identification number of the component.

Installing the component requires the following items that are **not** included in the scope of the delivery:

- HST-M1: built-in version (Ident.-No.: 10213, 10215, 10216, 10217)
  4 screws + M5 nuts from A2-70
- HST-M1: housing version (Ident.-No.: 10219, 10624, 10220, 10625)
  4 screws + up to max. M6 nuts from A2-70 is required
- Screw locking devices (toothed lock washers, disc springs, shaft washers, or screw adhesive)

Clean the work environment by removing dirt, grease and oil.

12.2 General approach

Use suitable tools when installing the component. Otherwise, bolts and nuts may become damaged and unusable.
When tightening the screws listed in section 12.1, do not exceed the max. tightening torque.
Use the items listed in section 12.1 to secure the screw connections.

12.3 Installation instructions:

Make the mounting holes according to the design of the component. The mounting holes should be arranged as shown in the diagrams (cf. section 20: **Dimensions**) and the drilling template.

Built-in version:
To support the delivery of a drilling template assembly is attached.

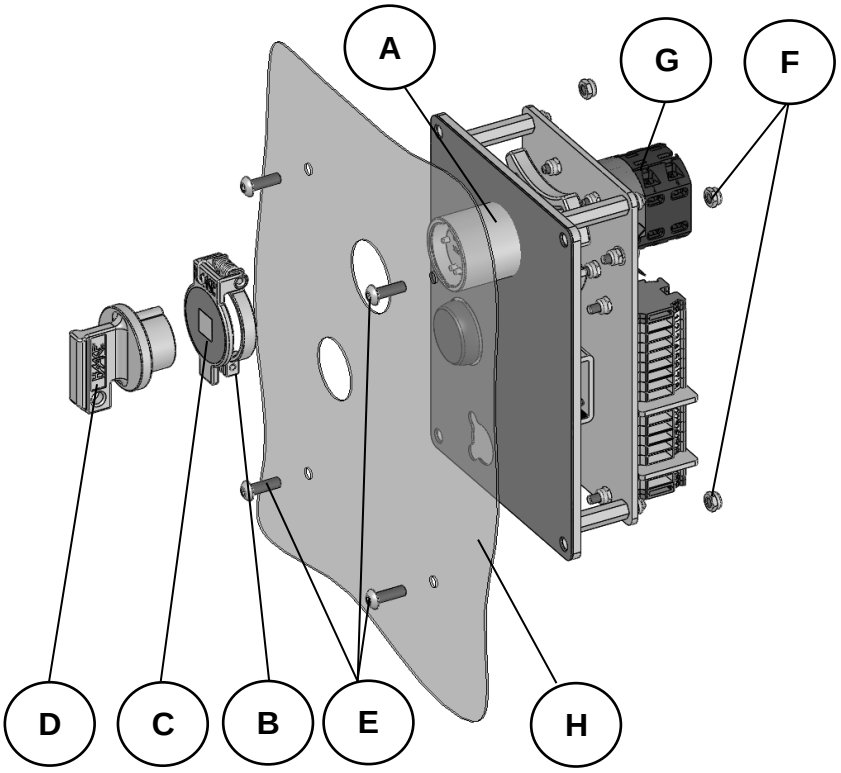

Figure shows HST-M1 Ident.-No.: 10213

Assembly group			
A	Lock	B	M3 screw
C	Protective cap	D	Switch key
E	M5 screws	F	Nut and plate for M5
G	Switch	H	Control panel or machine housing

- If necessary, remove the switch key [D] by manually operating the blocking element (solenoids).
- Remove the protective cap [C] after unscrewing the M3 screws [B] from the lock [A].
- Pass the HST-M1 from behind through the mounting holes in the control panel or machine housing [H].
- Attach the HST-M1 with 4 sufficiently long M5 screws [E] and matching nuts, washers [F].
- Secure the screw connection against coming loose.
- Carry out the electrical connection (cf. section 12.4)
- Reattach the protective cap [C] to the lock [A]. When doing so, make sure that the protective cap sits flush on the lock [A] when the switch key is removed.

No liability is accepted in the event of improper installation!

Housing version:

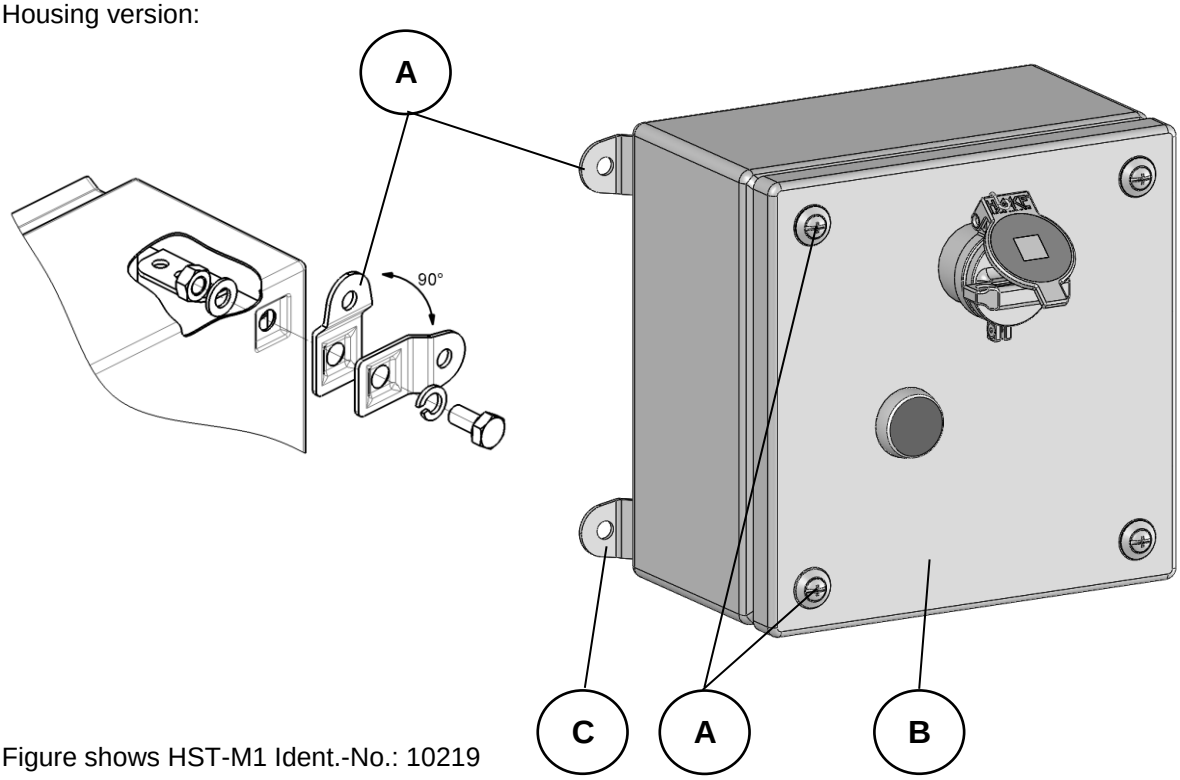

Figure shows HST-M1 Ident.-No.: 10219

Assembly group			
A	Lid screws	B	Housing lid
C	Housing box	D	Wall mounting

- Open the housing box [C] by unscrewing the 4 outer lid screws [A] of the housing box [C] and lift the housing lid [B] from the housing box [C] with the HST-M1. Make sure the protective earthing conductors are not damaged. Secure the housing lid [B] from falling down.
- Mount the enclosed wall mounting [D] according to the illustration.
- Attach the housing box [C] with suitable screws and nuts if necessary.
- Secure the screw connection against coming loose.
- Taking the conditions on site into account, create a hole to thread the cables into the housing box [B], insert a suitable cable gland with a protection class of at least IP 65 (**not** included in scope of delivery).
- Carry out the electrical connection (cf. section 12.4).
- Place the housing lid [B] back on the housing box [C] with the HST-M1and screw it in place with the 4 lid screws [A]. Make sure the protective earthing conductors are not squashed or disconnected.

Attention!

Make sure the protective earthing conductor is not squashed or disconnected.

No liability is accepted in the event of improper installation!

12.4 Electrical connection

Attention!

The protective earthing conductor must always be connected as first head!

The electrical connection of the switching element with locking mechanism HST-M1 is shown in the following circuit diagram for:

HST-M1 Ident.-No.: 10213
HST-M1 Ident.-No.: 10219

Position 1:
Switch key S1 locked by locking mechanism. Switch S2 is not pressed. Switch position ON

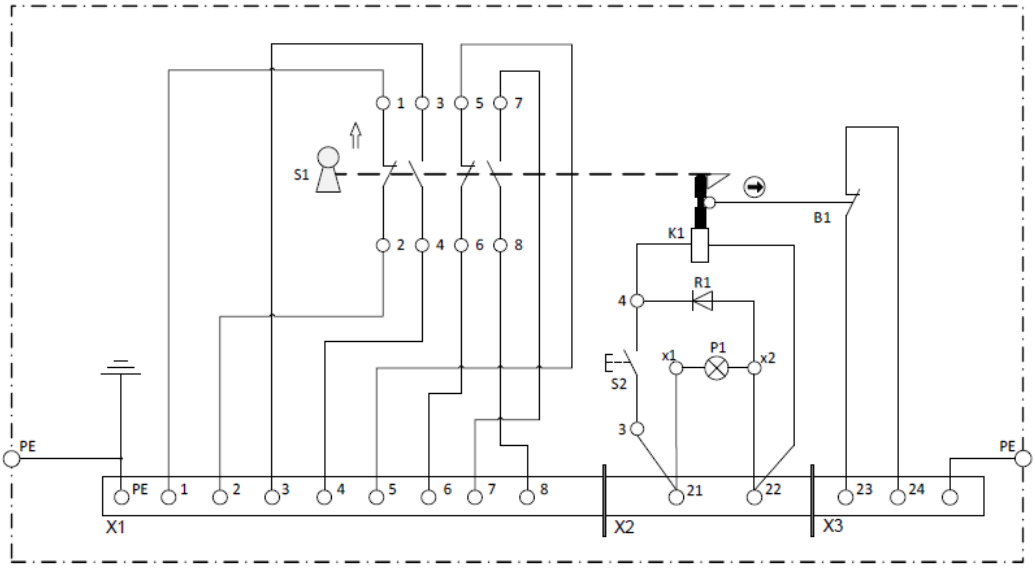

Position 0:
Switch key is unlocked and removed from S1. S2 button pressed. Switch position OFF

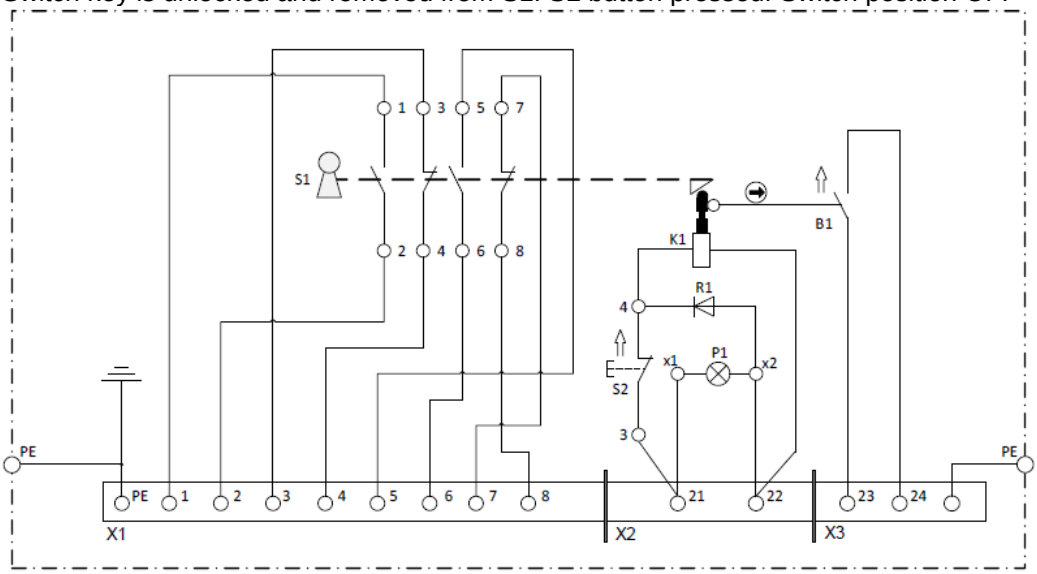

terminal block X1
==========
rated operating voltage: max. 500 V
rated operating current: max 20 A
rated surge voltage: max 6 kV

terminal block X2
==========
terminals 21 / 22:
+24 / 0 V DC

terminal block X3
==========
terminals 23 / 24:
AC max. 230 V / 1.5 A
DC max. 60 V / 0.5 A
or 24 V / 2 A

HST-M1 Ident.-No.: 10215
HST-M1 Ident.-No.: 10624

Position 1:
Switch key S1 locked by locking mechanism. Switch S2 is not pressed. Switch position ON

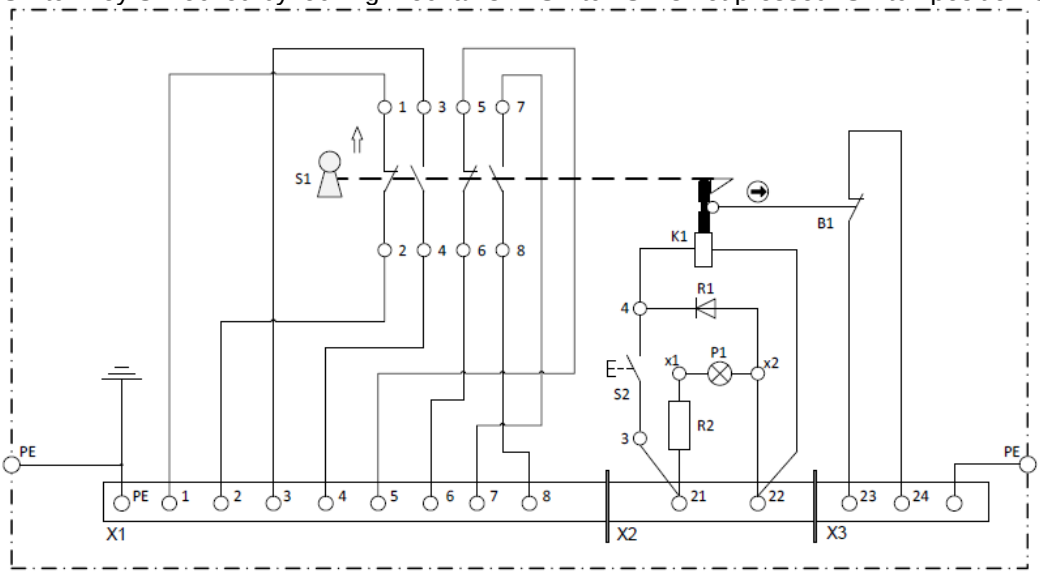

Position 0:
Switch key is unlocked and removed from S1. S2 button pressed. Switch position OFF

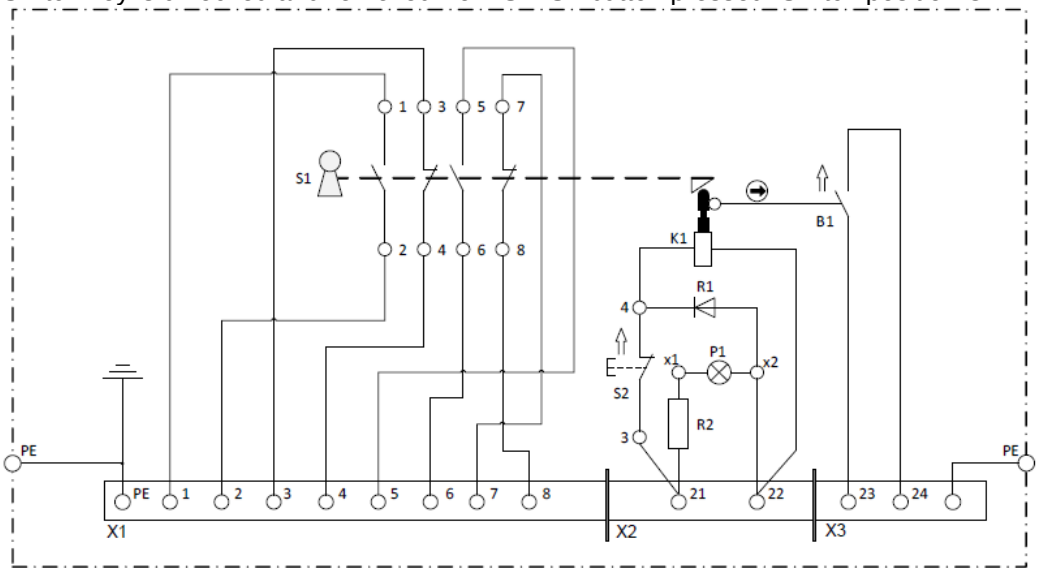

terminal block X1
==========
rated operating voltage: max. 500 V
rated operating current: max 20 A
rated surge voltage: max 6 kV

terminal block X2
==========
terminals 21 / 22:
+220 / 0 V DC

terminal block X3
==========
terminals 23 / 24:
AC max. 230 V / 1.5 A
DC max. 60 V / 0.5 A
or 24 V / 2 A

HST-M1 Ident.-No.: 10216
HST-M1 Ident.-No.: 10220

Position 1:
Switch key S1 locked by locking mechanism. Switch S2 is not pressed. Switch position ON

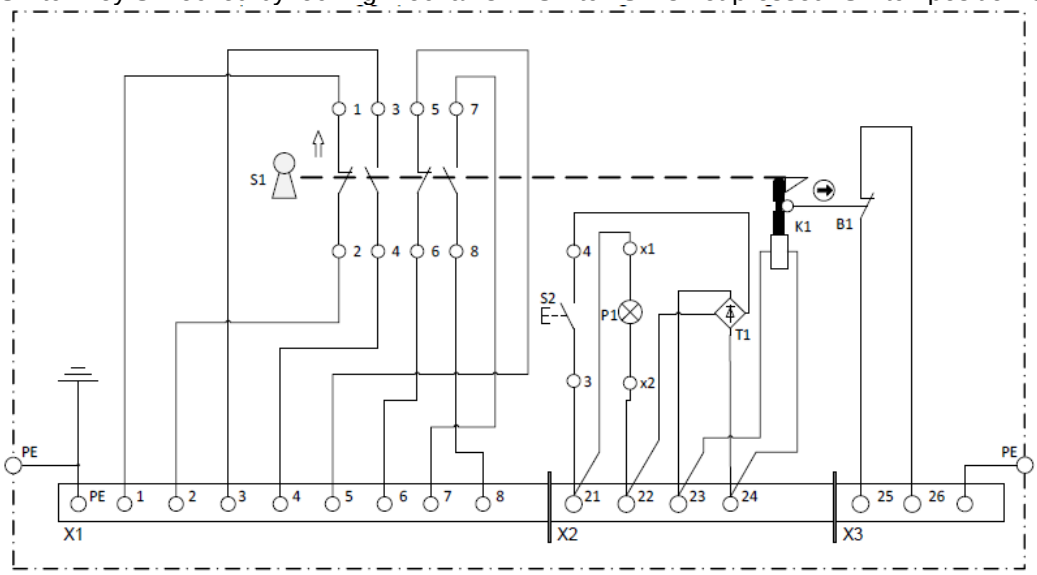

Position 0:
Switch key is unlocked and removed from S1. S2 button pressed. Switch position OFF

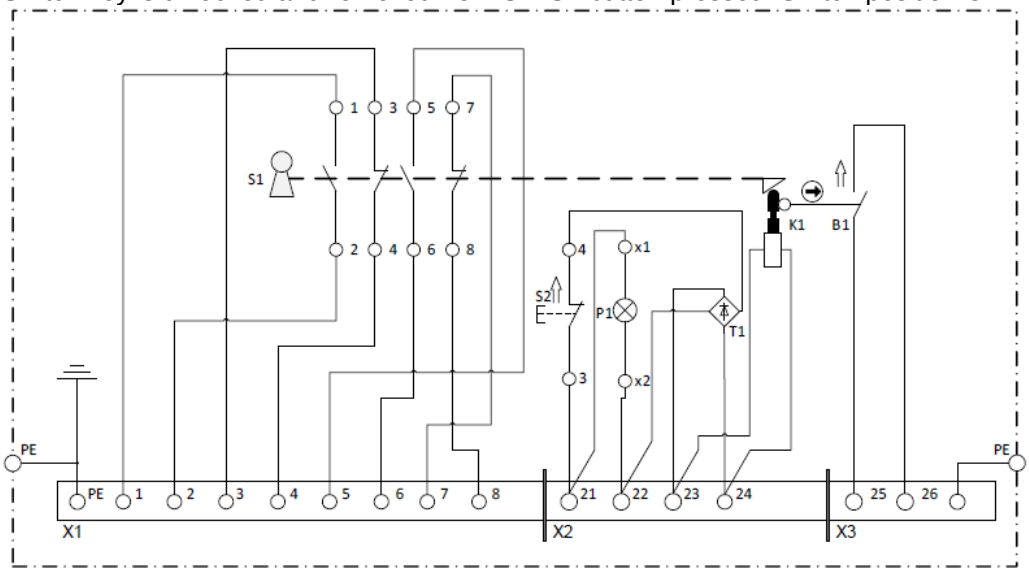

terminal block X1
==========
rated operating voltage: max. 500 V
rated operating current: max 20 A
rated surge voltage: max 6 kV

terminal block X2
==========
terminals 21 / 22:
230 V AC
terminals 23 / 24:
internal wiring

terminal block X3
==========
terminals 25 / 26:
AC max. 230 V / 1.5 A
DC max. 60 V / 0.5 A
or 24 V / 2 A

HST-M1 Ident.-No.: 10217
HST-M1 Ident.-No.: 10625

Position 1:
Switch key S1 locked by locking mechanism. Switch S2 is not pressed. Switch position ON

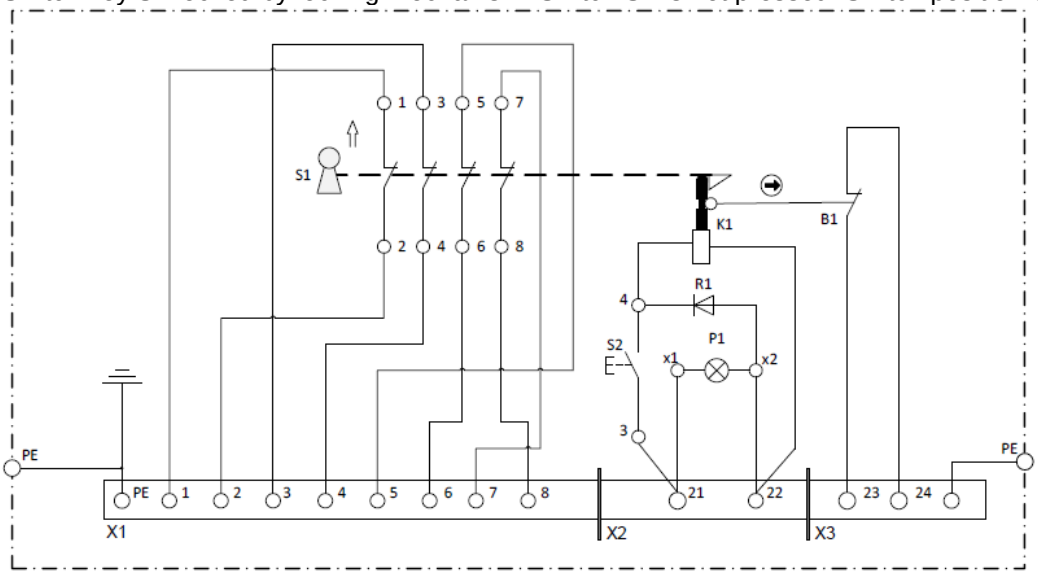

Position 0:
Switch key is unlocked and removed from S1. S2 button pressed. Switch position OFF

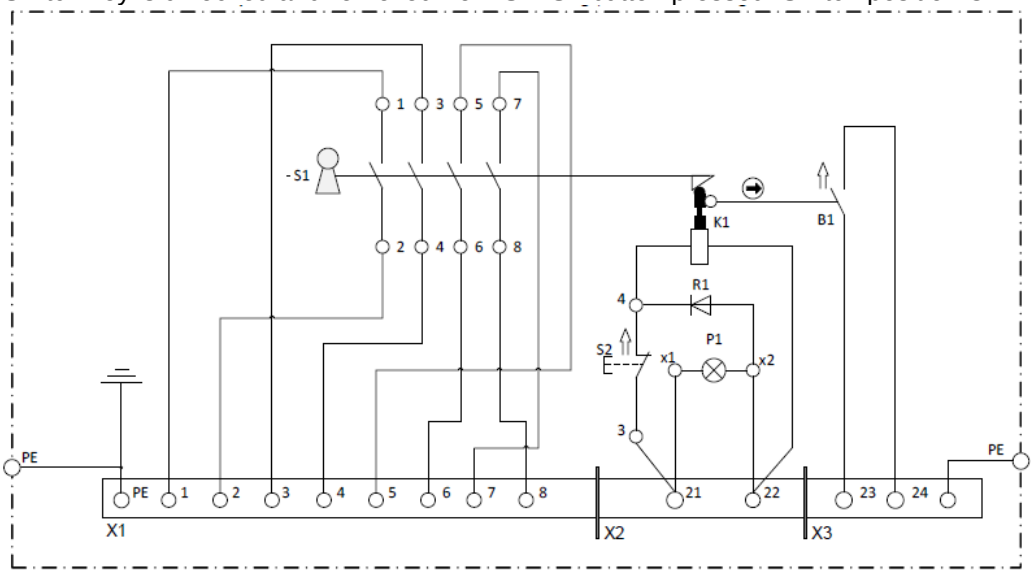

terminal block X1
==========
rated operating voltage: max. 500 V
rated operating current: max 20 A
rated surge voltage: max 6 kV

terminal block X2
==========
terminals 21 / 22:
+24 / 0 V DC

terminal block X3
==========
terminals 23 / 24:
AC max. 230 V / 1.5 A
DC max. 60 V / 0.5 A
or 24 V / 2 A



Attention:

Before starting up the following points must be observed:
Check connections to all terminals for tight connection! Tightening torque: min 0.6 Nm / max. 0.8 Nm

Installation housing or installation front panel grounded at the central grounding point about the existing blade terminal connections.

No liability is accepted in the event of improper installation!

13 Performance check



Attention!

The protective effectiveness of the component must be checked regularly
- at least once a year
or
- in intervals according to national operating instructions

Once installed, do not loosen any bolts or nuts or remove any pins; otherwise, the effectiveness of the safety-related functions is no longer guaranteed.

Once finished with installation tasks, carry out the following inspections:

- Check all bolted connections for tightness and ensure that the bolts cannot come loose by themselves.
- Check whether the component is stuck.
- Check whether all keys can be inserted and turned easily.
- Check whether the safety-relevant functions (cf. section 7) are ensured.
- Check whether all electrical connections, especially the protective earthing conductor, the correct assignment tight fit and proper execution.
- Check whether after applying the control voltage to the electromagnets (Standstill signal the machine or system) the illuminated push button lights up
- Turn the switch key while pressing the glowing illuminated push button and check the switch functions ON and OFF.
- Record the results of performance check.

14 Operation



Attention!

Never operate the key with extended lever arms. This may destroy the inner components and disable the safety function.

Do not attempt to unlock the component with objects other than the corresponding keys.

Do not ever attempt to insert or remove a key by applying excessive force or with the aid of a tool (hammer).

14.1 Inserting the key

- Insert the switch key (position 0) and turn it to position 1 until it stops (cf. section 10).
- The locking mechanism locks the switch key.

14.2 Removing the key

If a control voltage of the external monitoring device (e.g. a standstill monitor) is present in the locking mechanism the illuminated green push buttons lights up.

- Press the illuminated green push button and hold it down. Now turn the switch key at the same time in position 0 (cf. section 10).
- Remove the key.

15 Maintenance



Attention!

Adapt the frequency of checks to the environmental conditions at the application site.

No maintenance of the internal parts of the component is required.

We recommend the following maintenance measures:

- Check the component at regular intervals (at least once a year) for external damage.
- Check the protective cap is securely in place and the seal is functioning.

Damaged or faulty devices must be replaced.

16 Cleaning

No cleaning is required, as a rule.



Attention!

In dusty environments (e.g. cement dust, colour dust), only clean the component with compressed air.

Only use other cleaning methods after prior consultation with the manufacturer.

17 De-installation



Attention!

Only uninstall the component when power to the electrical system is switched off.

Loosen the attachment of the HST-M1 depending on the version.

Built-in version:

- If necessary, remove the switch key by manually operating the blocking element (solenoids).
- Remove the protective cap after unscrewing the M3 screw from the lock.
- Disconnect the electrical connection (cf. section 12.4).
- Detach the HST-M1 with the M5 screws chosen by you and the matching nuts.
- Remove the HST-M1.
- We recommend reattaching the protective cap to the lock. When doing so, make sure that the protective cap sits flush on the lock when the switch key is removed.

Housing version:

- Open the housing box by unscrewing the 4 outer lid screws of the housing box and lift the housing lid from the housing box with the HST-M1. Make sure the protective earthing conductors are not damaged. Secure the housing lid [B] from falling down.
- Disconnect the electrical connection and cable gland (cf. section 12.4).
- Detach the housing box with the screws chosen by you.
- We recommend replacing the lid on the housing box with the HST-M1 and screwing it in place with the 4 lid screws. Make sure the protective earthing conductors are not squashed or disconnected.

18 Troubleshooting

Fault	Possible cause	Remedy
The key cannot be inserted/ turned.	Wrong key / wrong coding.	Check labelling on the key and on the component.
	Deformed key.	Check key. Contact Haake Technik GmbH in case of deformation.
	Key inserted incorrectly.	Remove the key and if necessary insert it rotated 180°.
	Mechanical fault.	Contact Haake Technik GmbH.
Lock can only be operated with difficulty.	Mechanism is stiff.	Clean (cf. section 16) If necessary contact Haake Technik GmbH.
Safety-relevant function (cf. section 7) not fulfilled.		Contact Haake Technik GmbH.
	Faulty electrical connections.	Check the electrical connections.
You cannot remove the key.	Mechanical fault.	Contact Haake Technik GmbH.
	Faulty electrical connections.	Check the electrical connections.
	Push button is not pressed.	Wait until green button lights and press while turning.
	Switch key not in Position 0.	Turn the switch key to the stop and remove.
Lost key.		Contact Haake Technik GmbH.

19 Technical data

Environment:	indoor / outdoor
Temperature range:	
Built-in version:	-25 °C to +40 °C
Housing version:	-25 °C to +40 °C
Humidity:	to 100 % (standard climate)
Material:	
Lock:	stainless steel
Built-in version, Ident.-No.: 10213, 10215, 10216, 10217:	Mounting plate: galvanised steel Earthing plate: galvanised steel
Housing, Ident.-Nr.: 10219, 10624, 10220, 10625:	powder-coated sheet steel
Ambient atmosphere:	industrial environments
mounting position:	all positions
Mechanical service life:	
Lock :	280,000 actuations
Switch :	1,000,000 actuations
Service life:	15 years
$B10_d$- values:	
Switch; rated operating current 16/20 A:	36,000 switching operations
Switch; for 24 V DC and 0,21 A:	1,000,000 (in conjunction with PNOZ X3)
Mean Time To Failure ($MTTF_d$):	Application dependant
Protection class:	
Built-in version:	IP 2x
Housing version:	IP 65
Reference standard for rotary switch:	EN 60947-3
Technical information for the inbuilt switch:	see switch documentation

20 Dimensions

Dimensional specifications in mm.

Built-in version:

HST-M1 Ident.-No.: 10213
HST-M1 Ident.-No.: 10215
HST-M1 Ident.-No.: 10216
HST-M1 Ident.-No.: 10217

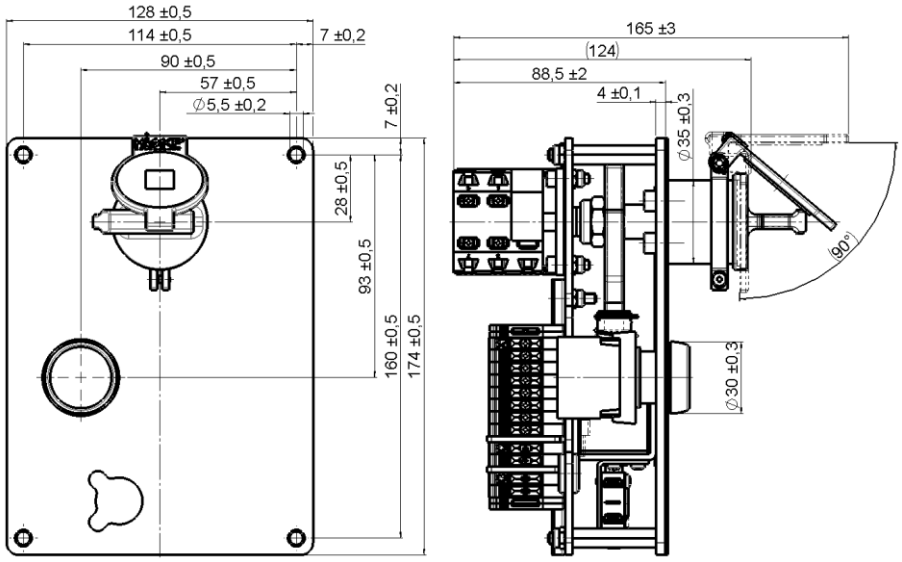

Figure shows HST-M1 Ident.-No.: 10213

Housing version:

HST-M1 Ident.-No.: 10219
HST-M1 Ident.-No.: 10624
HST-M1 Ident.-No.: 10220
HST-M1 Ident.-No.: 10625

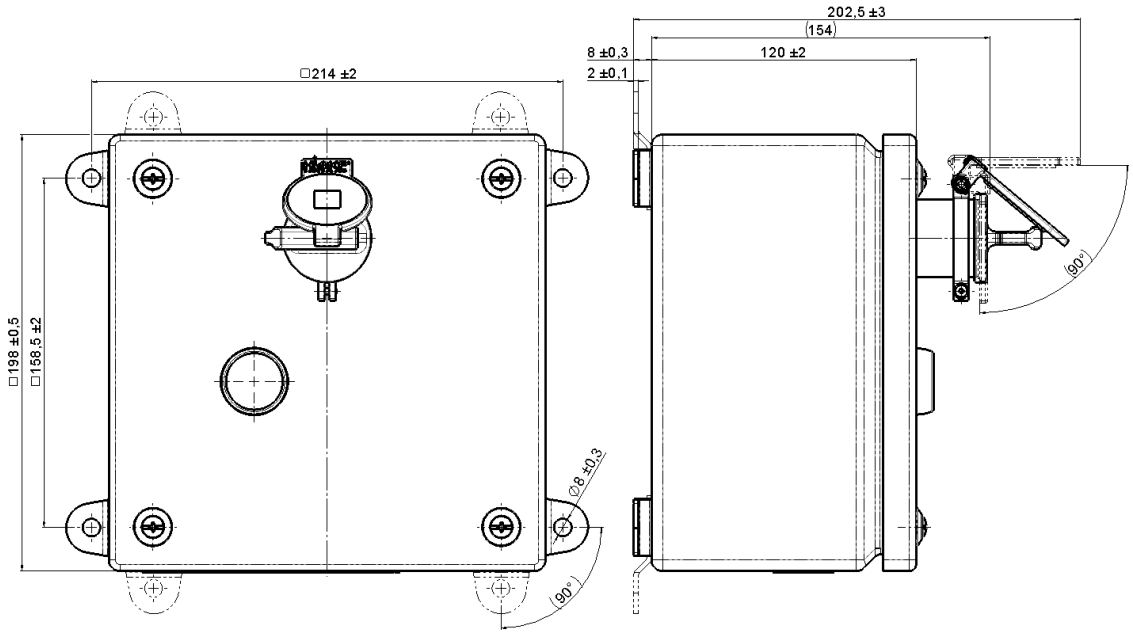

Figure shows HST-M1 Ident.-No.: 10219

21 EC Declaration of Conformity

EC Declaration of Conformity
in accordance with EC Directive 2006/42/EC Annex II 1. A

The company:	**Haake Technik GmbH** **Master Esch 72** **48691 Vreden**
hereby declares that the safety components:	**Switching element with locking mechanism**
Type:	**HST-M1**
Serial Number:	**see information on the product**

in the delivered version is in accordance with the following relevant regulations:

EC Directives:	**Machinery Directive 2006/42/EC**
Test specification:	**GS-ET 31** **Principles of testing and certification for** **Interlocking devices with key transfer systems**

The HST-M1 switching element with locking mechanism ensures voltage-free switching of load circuits of machinery and systems with run-down times, with rated currents up to 20 A, when hazardous motions have been stopped.

Our quality assurance system ensures that all safety components are manufactured with the same quality.
Therefore the Declaration of Conformity issued applies for all safety components of the above types produced from serial number 1129848.

Authorized representative to compile the technical documentation is:

HAAKE Technik GmbH
Herr Jens Schoppen
Master Esch 72
48691 Vreden

Vreden, 07.12.2012

André Haake
(Managing Director)

HAAKE Technik GmbH; Master Esch 72; 48691 Vreden
Tel.: (02564) 39650 Fax: (02564) 396590



Haake Technik GmbH
Master Esch 72
48691 Vreden, Germany
info@haake-technik.com
www.haake-technik.com
Tel.: +49 2564 39650
Fax: +49 2564 396590