Installation and Operating Manual for Components

HST®-B

Interlocking device

(Translation of Original Manual)

HST-B2 Ident.-No.: 10950
HST-B2 Ident.-No.: 12060
HST-B2 Ident.-No.: 12061
HST-B2 Ident.-No.: 12075
HST-B2 Ident.-No.: 12117
HST-B2 Ident.-No.: 12233

HST-B3 Ident.-No.: 12062
HST-B3 Ident.-No.: 12063
HST-B3 Ident.-No.: 12211

HST-B4 Ident.-No.: 12064
HST-B4 Ident.-No.: 12065
HST-B4 Ident.-No.: 12203

HST-B5 Ident.-No.: 12204

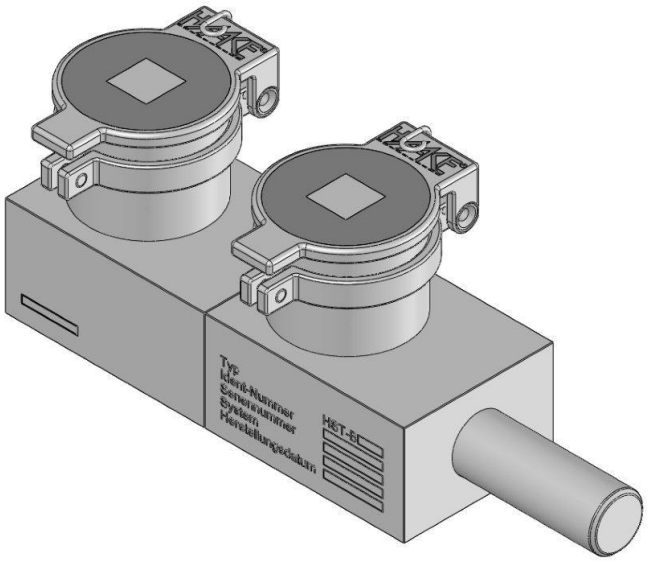

HST-B2, pictured Ident.-No.: 10950
The image may differ from the product.

Read the operating manual before beginning any work!

Haake Technik GmbH
Master Esch 72
48691 Vreden, Deutschland
info@haake-technik.com
www.haake-technik.com
Tel.: +49 2564 39650
Fax: +49 2564 396590

Doc-ID. 543668
02-2016

This installation and operating manual contains proprietary information, which is subject to copyright. No parts of this documentation may be reproduced or transferred in any manner or by any means, be it electronic or mechanical, for any purpose without obtaining prior written consent.
Haake Technik GmbH assumes no liability for damage or subsequent damage, arising from the use of components or replacement parts, which are not original parts.
Haake and HST are registered trademarks of Haake Technik GmbH. All other brand and product names not mentioned here are or may be registered trademarks and are to be treated accordingly.

© Haake Technik GmbH, Master Esch 72, 48691 Vreden, Germany
All rights reserved.

Contents

1 Scope ... 3
2 Intended use ... 3
3 Symbol Explanation ... 3
4 Disposal ... 3
5 Foreseeable misuse ... 4
6 Identification ... 4
7 Safety-revelant function ... 4
8 Fault exclusions ... 5
9 Scope of delivery ... 6
10 Structure and function ... 6
10.1 Description ... 6
10.2 Example ... 6
11 Safety measures ... 7
11.1 Organisational measures ... 7
11.2 Safety of persons ... 7
11.3 Operating conditions and limitations of use ... 7
11.4 Assembly ... 7
11.5 Repairs / Alterations ... 7
12 Installation ... 8
12.1 Preparation ... 8
12.2 General approach ... 9
12.3 Installation instructions ... 9
13 Performance check ... 9
14 Operation ... 10
14.1 Inserting the keys ... 10
14.2 Removing the keys ... 10
15 Maintenance ... 10
16 Cleaning ... 11
17 De-installation ... 11
Troubleshooting ... 12
18 Technical data ... 12
19 Dimensions ... 13
20 EC Declaration of Conformity ... 20

1 Scope

This installation and operating manual is intended for persons who have been authorized to carry out tasks involving the installation or operation of the HST-series. International, national and, where appropriate, regional regulations are to be observed when handling key transfer systems.

If you have any questions which are not answered in this manual, please get in touch with your regional customer service centre or else make direct contact with

Haake Technik GmbH
Master Esch 72, 48691 Vreden, Germany
Telephone +49 2564 39650
Fax +49 2564 396590
Info@haake-technik.com

2 Intended use

The interlocking device HST-B is used to block control elements in switchgear that are not part of the interlocking device. To this end, the locking bolt can extend into or retract from the recess in the control element of the switchgear, thus preventing or enabling the control element to be operated.

Other applications are prohibited.

3 Symbol Explanation

Warnings are indicated by symbols. The notices are introduced by signal words to indicate the extent of the hazard.



Attention!

… indicates a potentially hazardous situation, which may lead to personal injury and damage to property if it is not avoided.



NOTE!

… highlights useful tips and recommendations as well as information for efficient and fault-free operation.

4 Disposal



The device must be properly disposed of in accordance with national laws and regulations.

5 Foreseeable misuse

Never operate the keys with extended lever arms. This can damage the internal components and may render the safety function inoperative.
Do not attempt to unlock the component with objects other than the corresponding keys.
Do not attempt to insert or remove a key by applying excessive force or with the aid of a tool (hammer)



Attention!

Use of the interlocking device HST-B as a guard-locking mechanism is not permitted, because when the protective device is open, the locking bolt can slide out into nothing.

6 Identification

You can find the model designation and serial number on the component's type label for exact identification.
If the component is part of a key transfer system, this information, except for the serial number, can also be found on the key plan.
Note these details (prior to installation, if necessary), so that they can be provided in case of questions or for ordering spare parts.

7 Safety-revelant function

The safety-relevant function is performed according to the following requirements:

1. Do not remove the two keys when the locking bolt is retracted. (cf. section 10.2)
2. When the locking bolt is extended, do not retract it if the keys is not inserted and turned (cf. section 10.2).

8 Fault exclusions

Due to the construction, materials, and components used for the component, the faults listed in the table can be excluded:

Potential Fault	**Exclusion of Fault**	**Limitations of Use**	**Reason**
Wear, corrosion.	Permissible acc. To tables A.4 and A.5 of DIN EN ISO 13849-2.	See sections 2 **Intended use** and sections 19 **Technical data**.	Use of carefully selected materials and manufacturing processes; use of proven springs and special mounting methods.
Non-tightening /Loosening (parts of the component).	Permissible acc. To tables A.4 and A.5 of DIN EN ISO 13849-2	See section 2 **Intended use**.	Use of carefully selected materials and manufacturing processes; use of proven springs and special mounting methods.
Weakening of force due to permanent deformation or fracture.	Permissible acc. To table A.5 of DIN EN ISO 13849-2.	See section 14 **Operation**.	Use of proven springs and special mounting methods.
Fracture, deformation due excessive load.	Permissible acc. To tables A.4 and A.5 of DIN EN ISO 13849-2.	See section 14 **Operation**.	Use of carefully selected materials; over dimensioning using safety factor 2 and replication of parts; use of proven springs and special mounting methods.
Stiffness/Getting stuck.	Permissible acc. To tables A.4 and A.5 of DIN EN ISO 13849-2.	See sections 2 **Intended use** and sections 14 **Operation**.	Use of carefully selected materials; over dimensioning using safety factor 2 and replication of parts; use of proven springs and special mounting methods.

9 Scope of delivery

1 x interlocking device HST-B

NOTE!

*Means of attachment and properly coded keys are **not** included in the scope of delivery.*

10 Structure and function

10.1 Description

The Interlocking device HST-B consists of multiple housings with integrated lock and sliding locking bolt.
After the control element of switchgear (not part of the interlocking device) is switched to OFF mode, the locking bolt of the interlocking device is extended by turning the coded key. It must thereby slide into a recess in the control element of the switchgear and thus block the control element mechanically. This must be ensured by the installation. Operation of the control element is blocked until the keys are reinserted and the locking bolt retracted again by turning the keys.

10.2 Example

Power ON:
The keys cannot be retracted:

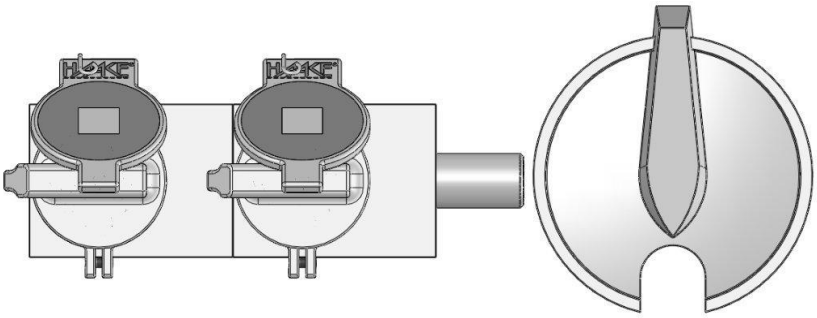

Power OFF:
The keys are free:

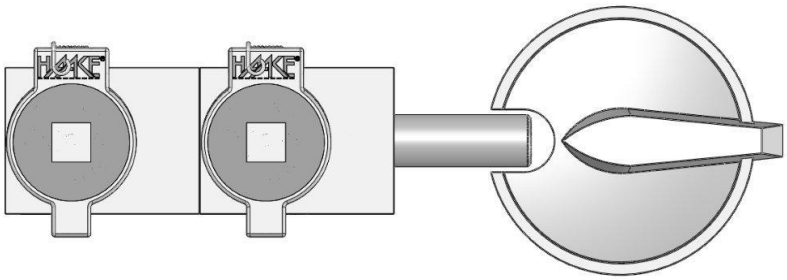

Figure shows HST-B2 Ident.-No.: 10950

11 Safety measures

11.1 Organisational measures

Persons who have been authorised to carry out tasks involving the installation or removal of the component must have read and understood this manual prior to commencing such tasks.
The operator of the plant or machine has an obligation to ensure the installation and de-installation is carried out safely and with no hazards by implementing appropriate safety measures.

11.2 Safety of persons

Personnel responsible for installation or removal tasks have to be suitably skilled or else have to be instructed by suitably skilled persons. On account of their technical training and experience, such skilled persons have sufficient knowledge of the installation or machine. These persons are sufficiently familiar with the applicable domestic work protection and accident prevention regulations of relevance here, that they are able to assess the operational safety of the installation or machine.
It is necessary to implement accident- and fall-prevention measures, whenever tasks are performed or areas are traversed at height.

11.3 Operating conditions and limitations of use

Please note the **intended use** (cf. section 2) and the **technical information** (cf. section 19) described in this manual.

11.4 Assembly

Before beginning installation, ensure that the component is intended and suitable for the particular installation site, based on the information on the type label. Always carry out a function test after installation.
Do not make any alterations to the installation after the function test has been successfully carried out.

11.5 Repairs / Alterations

Do not carry out any repairs to the component. Do not replace or exchange any parts. Send damaged or faulty components to Haake Technik GmbH to be repaired.
Do not make any alterations to the component. Otherwise this could lead to malfunctions, which can cause serious personal injury and irreparable damage to property.

In the event of non-compliance, the guarantee is invalidated and Haake Technik GmbH does not accept any liability.

12 Installation



Attention!

When installing the component, choose a means of attachment that cannot easily be detached (e.g. riveting or safety screws).

12.1 Preparation

Before beginning installation, ensure that the identification number given in this installation and operation manual corresponds to the identification number of the component.

Installing the component requires the following items that are **not** included in the scope of delivery:

HST-B2, attachment from the back
(Ident.-No.: 10950, 12117, 12233)

- 4 M8 screws x “length depending on the installation site” from A2-70
- Screw locking devices (toothed lock washers, disc springs, shaft washers, or screw adhesive)

HST-B2, attachment from the front
(Ident.-No.: 12060, 12061, 12075)

- 4 M8 screws x “length depending on the installation site” from A2-70 and nuts if necessary
- Screw locking devices (toothed lock washers, disc springs, shaft washers, or screw adhesive)

HST-B3, attachment from the back
(Ident.-No.: 12211)

- 6 M8 screws x “length depending on the installation site” from A2-70
- Screw locking devices (toothed lock washers, disc springs, shaft washers, or screw adhesive)

HST-B3, attachment from the front
(Ident.-No.: 12062, 12063)

- 6 M8 screws x “length depending on the installation site” from A2-70 and nuts if necessary
- Screw locking devices (toothed lock washers, disc springs, shaft washers, or screw adhesive)

HST-B4, attachment from the back
(Ident.-No.: 12203)

- 8 M8 screws x “length depending on the installation site” from A2-70
- Screw locking devices (toothed lock washers, disc springs, shaft washers, or screw adhesive)

HST-B4, attachment from the front
(Ident.-No.: 12064, 12065)

- 8 M8 screws x “length depending on the installation site” from A2-70 and nuts if necessary
- Screw locking devices (toothed lock washers, disc springs, shaft washers, or screw adhesive)

HST-B5, attachment from the back
(Ident.-No.: 12204)

- 10 M8 screws x “length depending on the installation site” from A2-70
- Screw locking devices (toothed lock washers, disc springs, shaft washers, or screw adhesive)



Attention!

The bolt must not close into nothing.

Clean the work environment by removing dirt, grease and oil.

12.2 General approach

Use suitable tools when installing the component. Otherwise, bolts and nuts may become damaged and unusable.
When tightening the screws listed in section 12.1, do not exceed the max. tightening torque.
Use the items listed in section 12.1 to secure the screw connections.

12.3 Installation instructions

Make the mounting holes according to the design of the component. The mounting holes should be arranged as shown in the diagrams (cf. section 20: **Dimensions**).
The component must be installed in very close proximity to the control element of the switchgear on a fixed part and the bolt must not close into nothing.

No liability is accepted in the event of improper installation!

13 Performance check



Attention!

The protective effectiveness of the component must be checked regularly
- at least once a year
or
- in intervals according to national operating instructions

Once installed, do not loosen any bolts or nuts or remove any pins; otherwise, the effectiveness of the safety-related functions is no longer guaranteed.

Once finished with installation tasks, carry out the following inspections:

- Check all bolted connections for tightness and ensure that the bolts cannot come loose by themselves.
- Check whether the component is stuck.
- Check whether all keys can be inserted and turned easily.
- Check whether the **safety-relevant functions** (cf. section 7) are ensured.
- Record the results of performance check.

14 Operation



Attention!

Never operate the key with extended lever arms. This may destroy the inner components and disable the safety function.

Do not attempt to unlock the component with objects other than the corresponding keys.

Do not ever attempt to insert or remove a key by applying excessive force or with the aid of a tool (hammer).

14.1 Inserting the keys

Unlatch the control element of the switchgear (see also section 10.2):

- Insert the key and turn the control element of the switching device most distant key as the first. Then turn the other key to retract the locking bolt.
- Return the control element of the switchgear to the original position (“ON”).
- The keys are latched to prevent removal.

14.2 Removing the keys

Latch the control element of the switchgear (see also section 10.2):

- Turn the control element of the switchgear to the safety-relevant position (“OFF”).
- Turn the first button to extend the control element positioned closest to the key the locking pin into the recess of the control element (Control is locked). Then turn the other key.
- Remove the keys.

15 Maintenance



Attention!

Adapt the frequency of checks to the environmental conditions at the application site.

No maintenance of the internal parts of the component is required.

We recommend the following maintenance measures:

- Check the component at regular intervals (at least once a year) for external damage.
- Check the protective dust cover is securely in place and the seal is functioning.

Damaged or faulty devices must be replaced.

16 Cleaning

No cleaning is required, as a rule.



Attention!

In dusty environments (e.g. cement dust, colour dust), only clean the component with compressed air.

Only use other cleaning methods after prior consultation with the manufacturer.

17 De-installation



Attention!

Only uninstall the component when power to the electrical system is switched off.

Loosen the HST-B attachment depending on the version.

- If the component is attached from the back, unscrew both M8 screws.
- If it is attached from the front, loosen the alternative means of attachment chosen by you (e.g. riveting, safety screws by drilling them out).

Troubleshooting

Fault	Possible cause	Remedy
The key cannot be inserted/ turned.	Wrong key / wrong coding.	Check labelling on the key and on the component.
	Deformed key.	Check key. Contact Haake Technik in case of deformation.
	Key inserted incorrectly.	Remove the key and if necessary insert it rotated 180°.
	Mechanical fault.	Contact Haake Technik.
Lock can only be operated with difficulty.	Mechanism is stiff.	Clean (cf. section 16) If necessary contact Haake Technik GmbH.
Safety-relevant function (cf. section 7) not fulfilled.		Contact Haake Technik.
You cannot remove the key.	Mechanical fault.	Contact Haake Technik.
	Locking bolt not in safety-relevant final position.	Ensure that the locking bolt is in the safety-relevant final position.
Lost key.		Contact Haake Technik.

18 Technical data

Environment:	Indoor / outdoor
Ambient temperature:	
Ident.-No.: 12075, 12233:	-25°C to +250°C
Ident.-No.: 10950, 12060, 12061, 12063, 12064, 12065, 12117, 12203, 12204, 12211:	-25°C to +80°C
Humidity:	up to 100 % (standard climate)
Material:	stainless steel
Ambient atmosphere:	industrial environments
Mounting position:	all
Mechanical service life:	280,000 actuations
Service life:	15 years
Mean Time To Failure ($MTTF_d$):	150 years
Bolt stroke:	18 mm ±1
Bolt diameter:	
Ident.-No.: 10950, 12075:	16 mm ±0,2
Ident.-No.: 12060, 12061, 12063, 12064 12065:	13 mm ±0,2
Ident.-No.: 12117, 12203, 12204, 12211:	6 mm ±0,2

19 Dimensions

Dimensional specifications in mm.

HST-B2 Ident.-No.: 10950

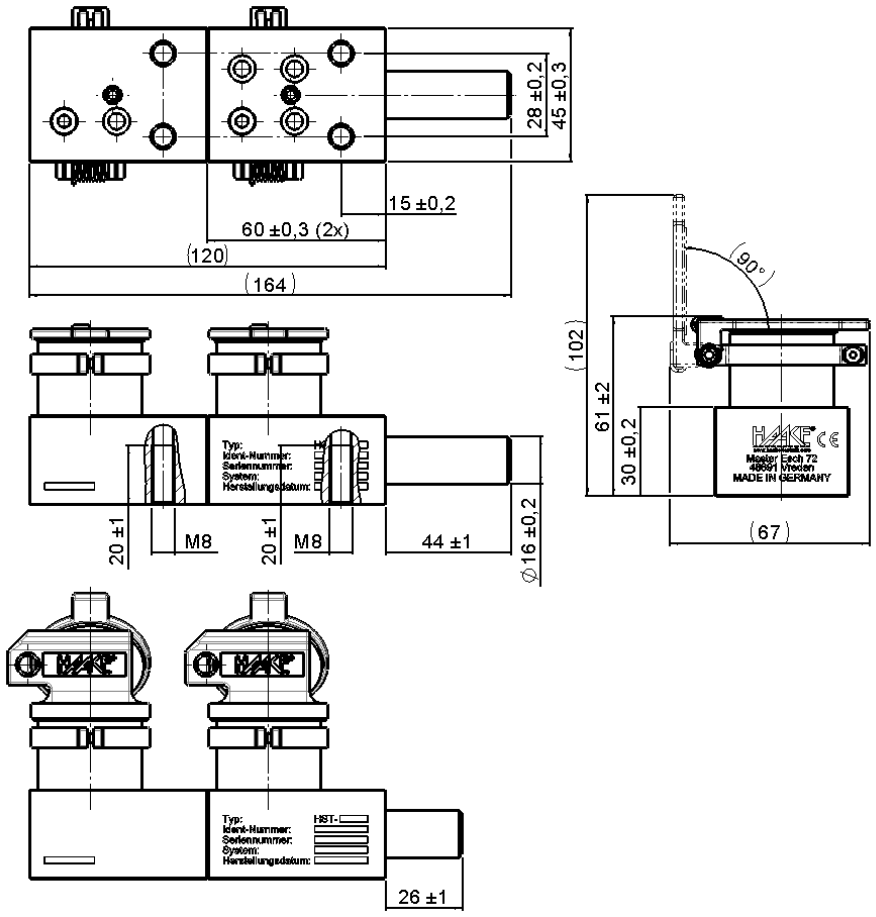

HST-B2 Ident.-No.: 12060

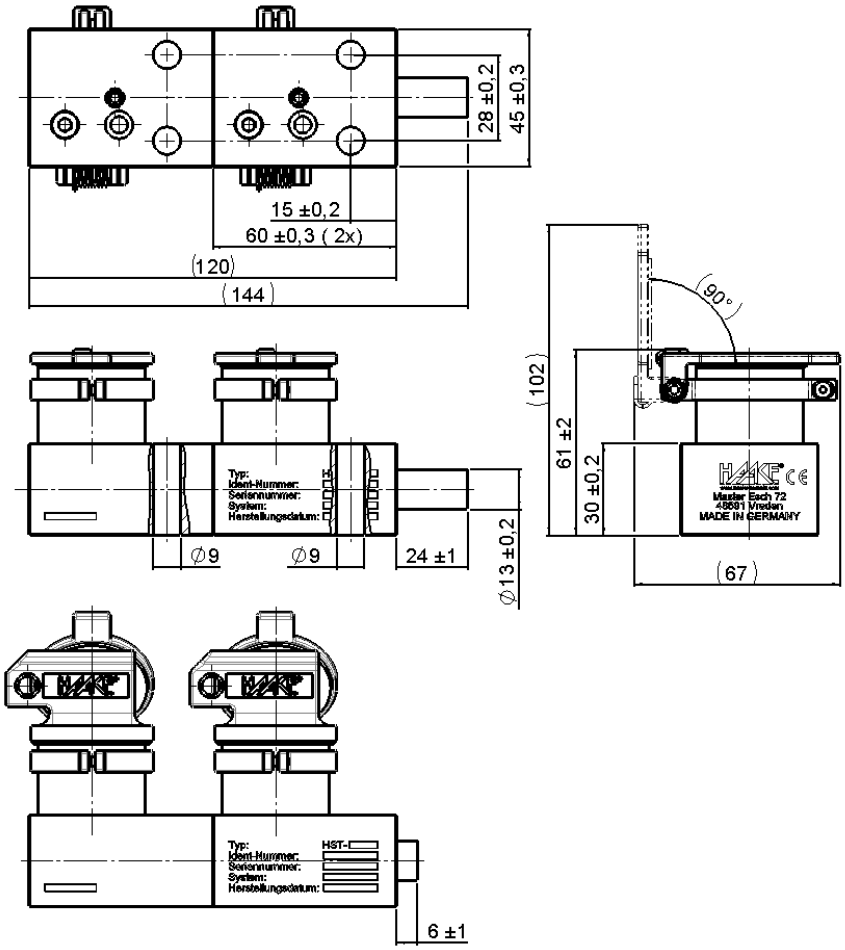

HST-B2 Ident.-No.: 12061

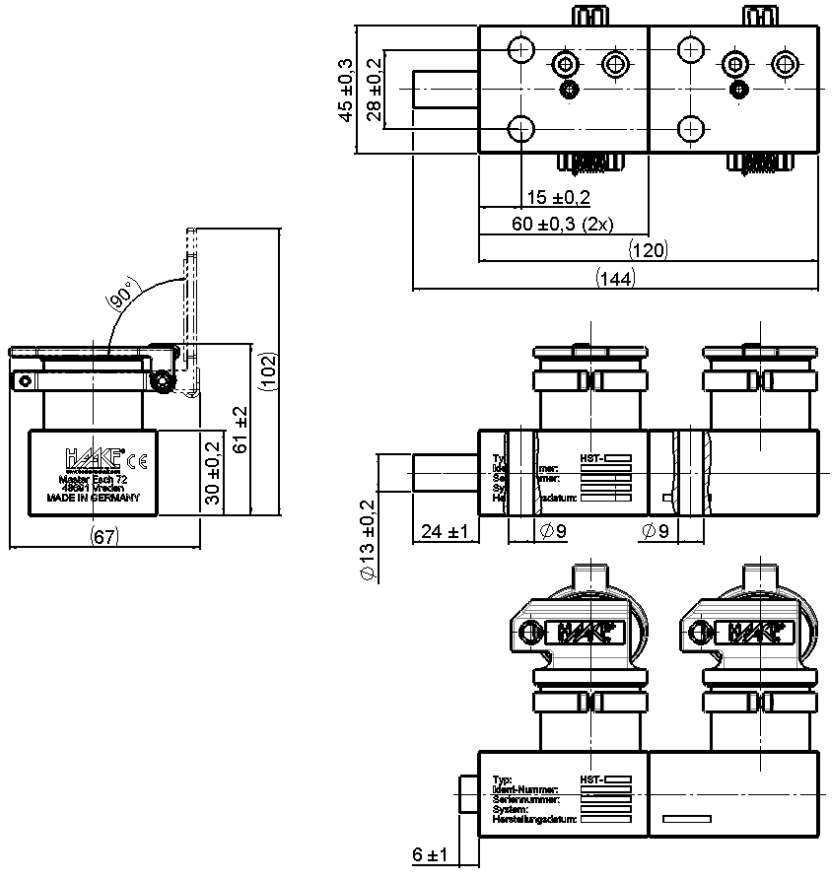

HST-B3 Ident.-No.: 12062

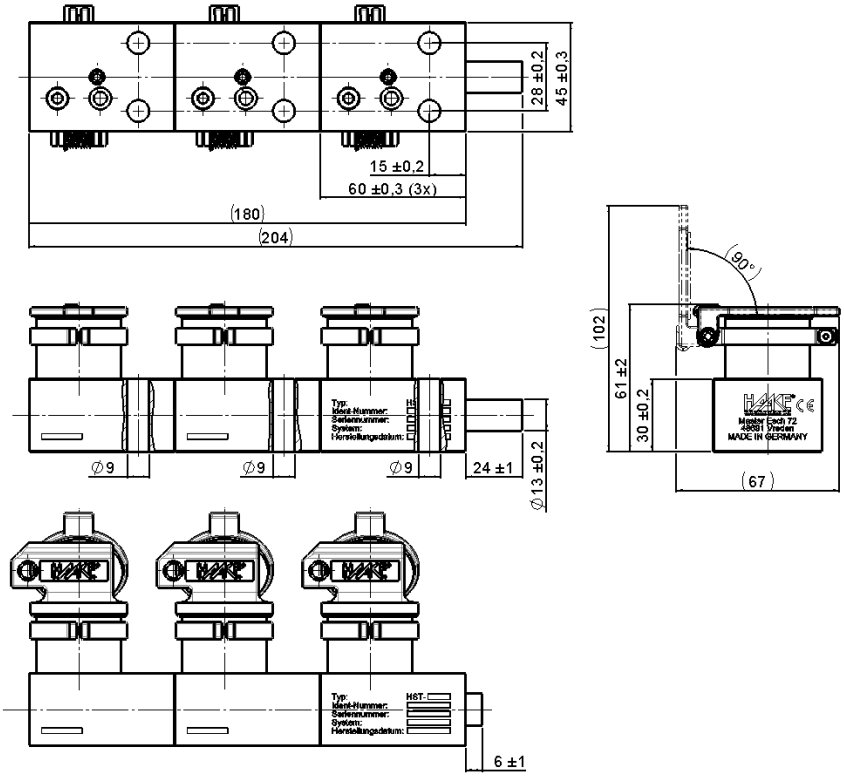

HST-B3 Ident.-No.: 12063

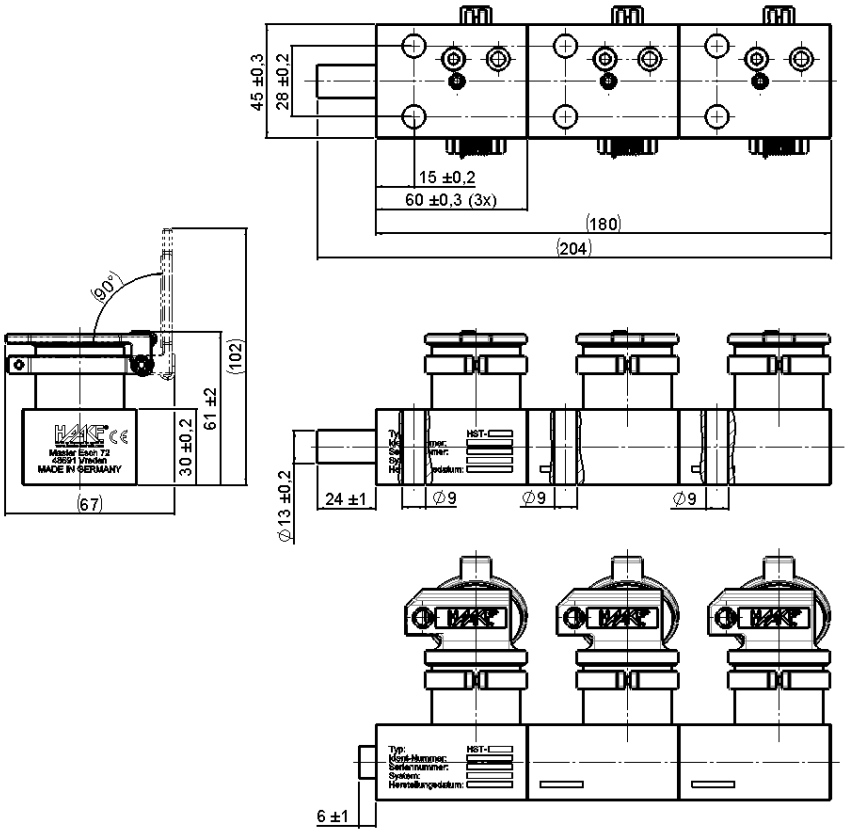

HST-B4 Ident.-No.: 12064

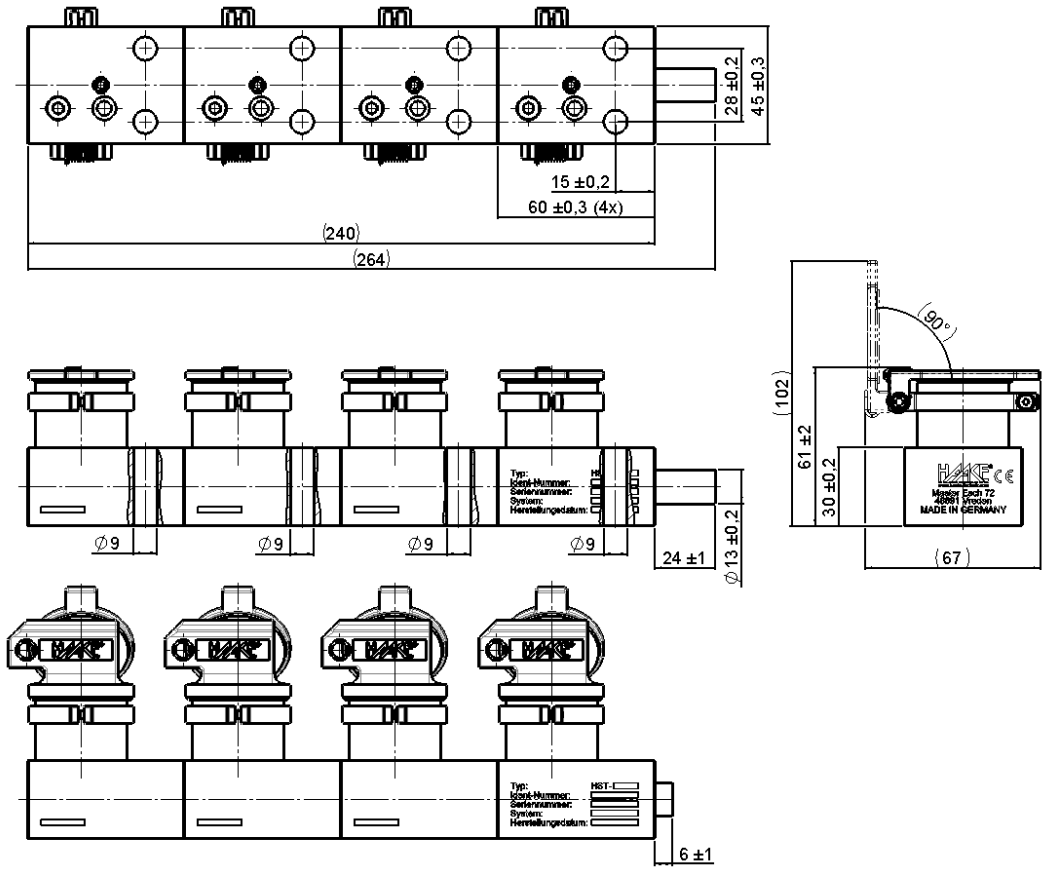

HST-B4 Ident.-No.: 12065

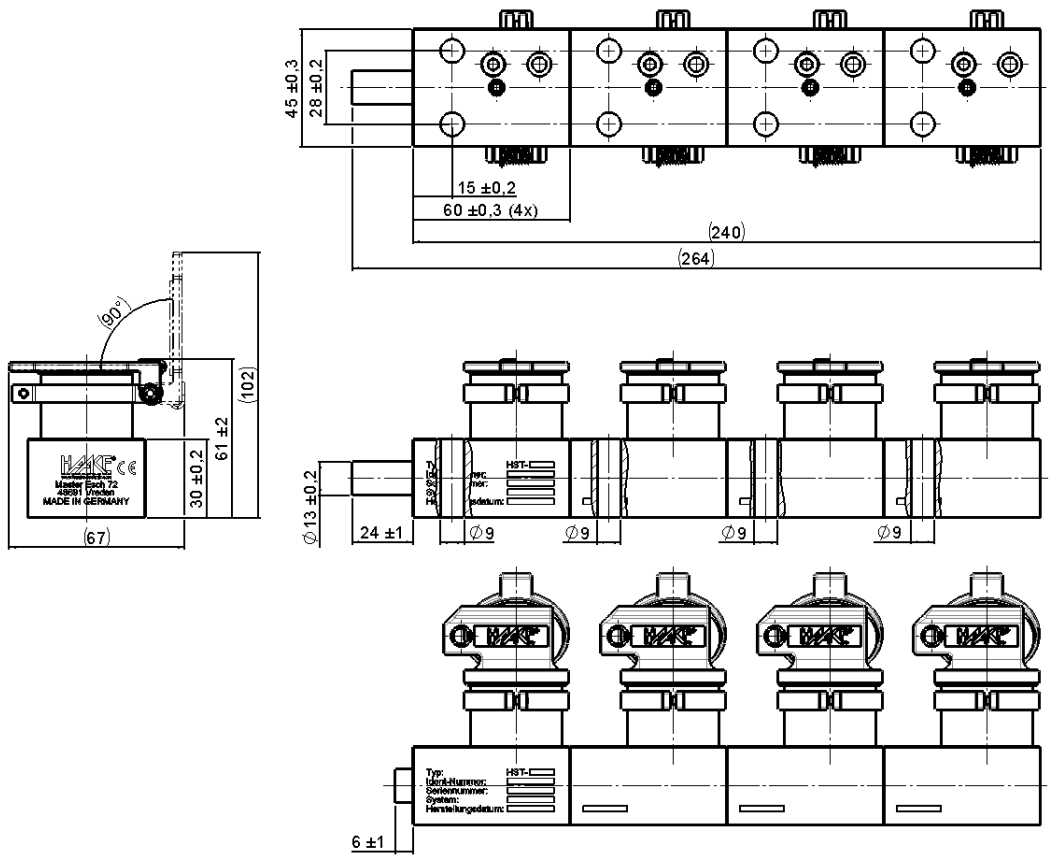

HST-B2 Ident.-No.: 12075

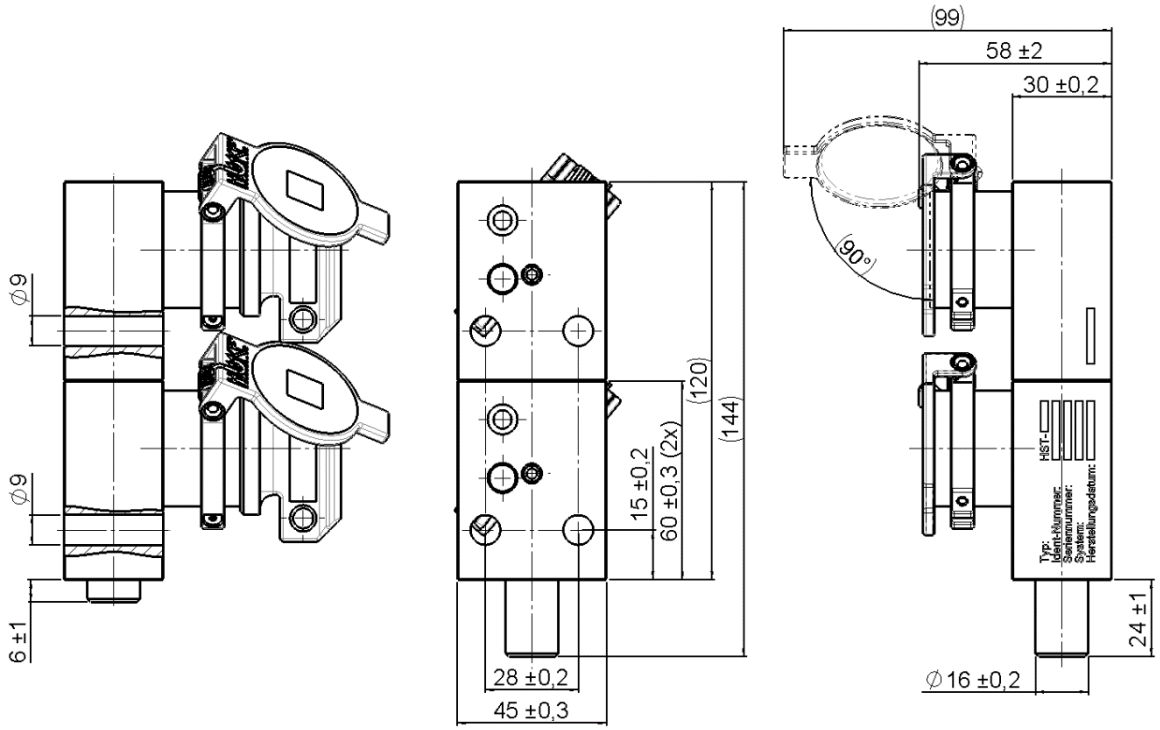

HST-B2 Ident.-No.: 12117

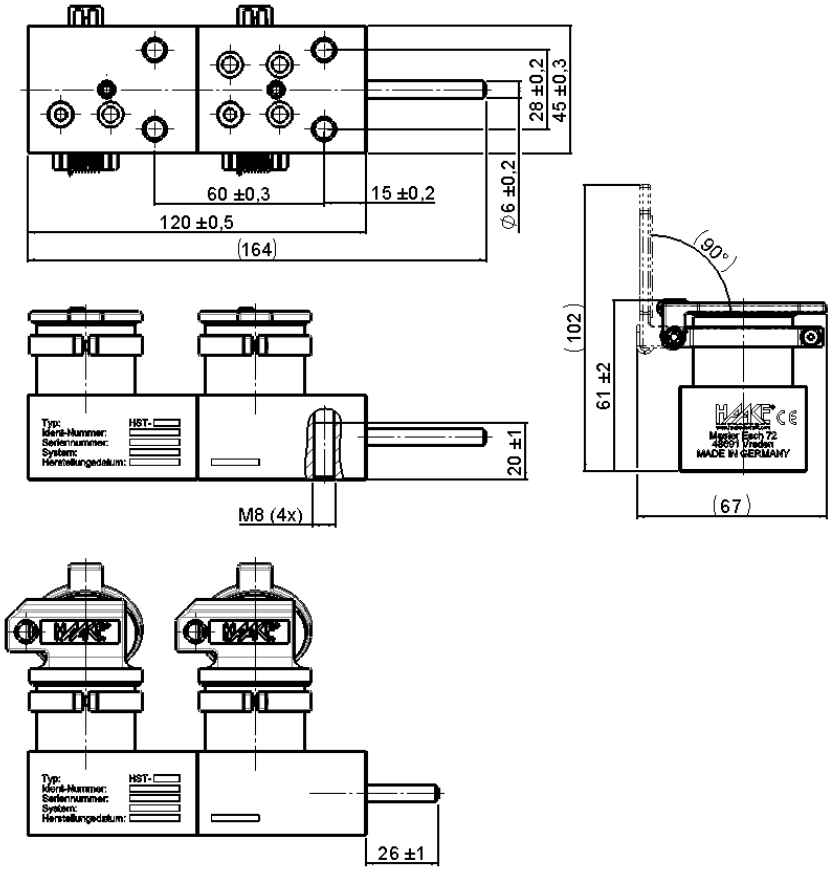

HST-B4 Ident.-No.: 12203

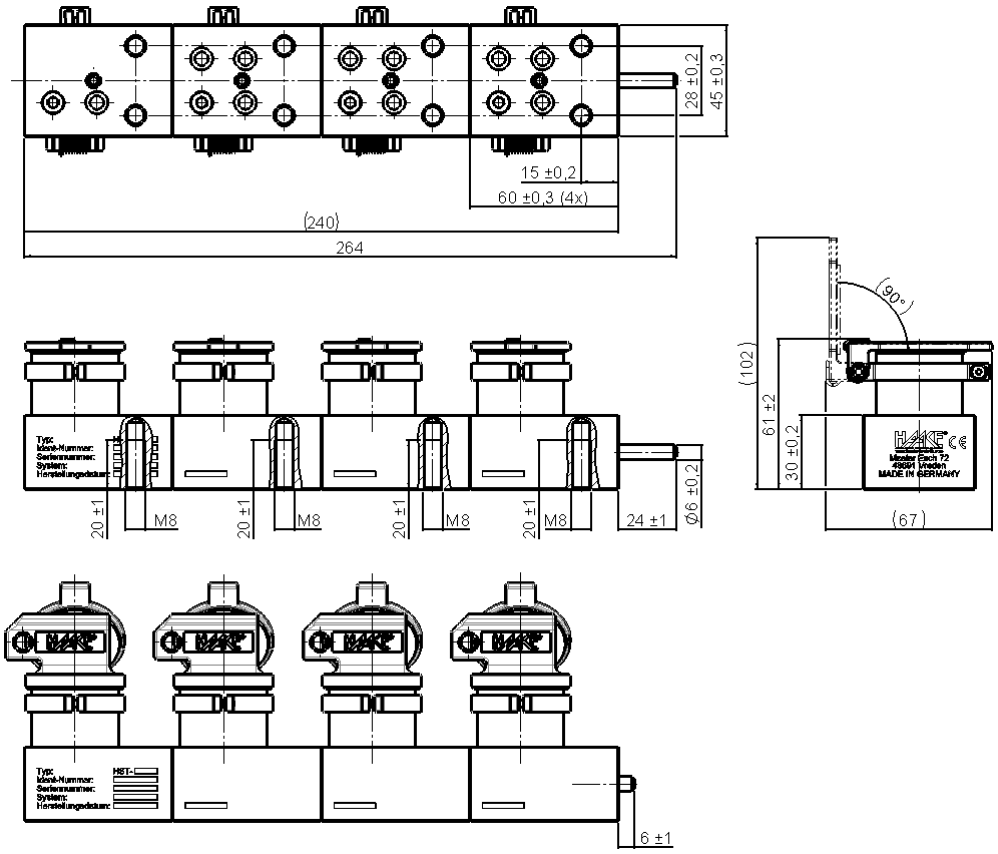

HST-B5 Ident.-No.: 12204

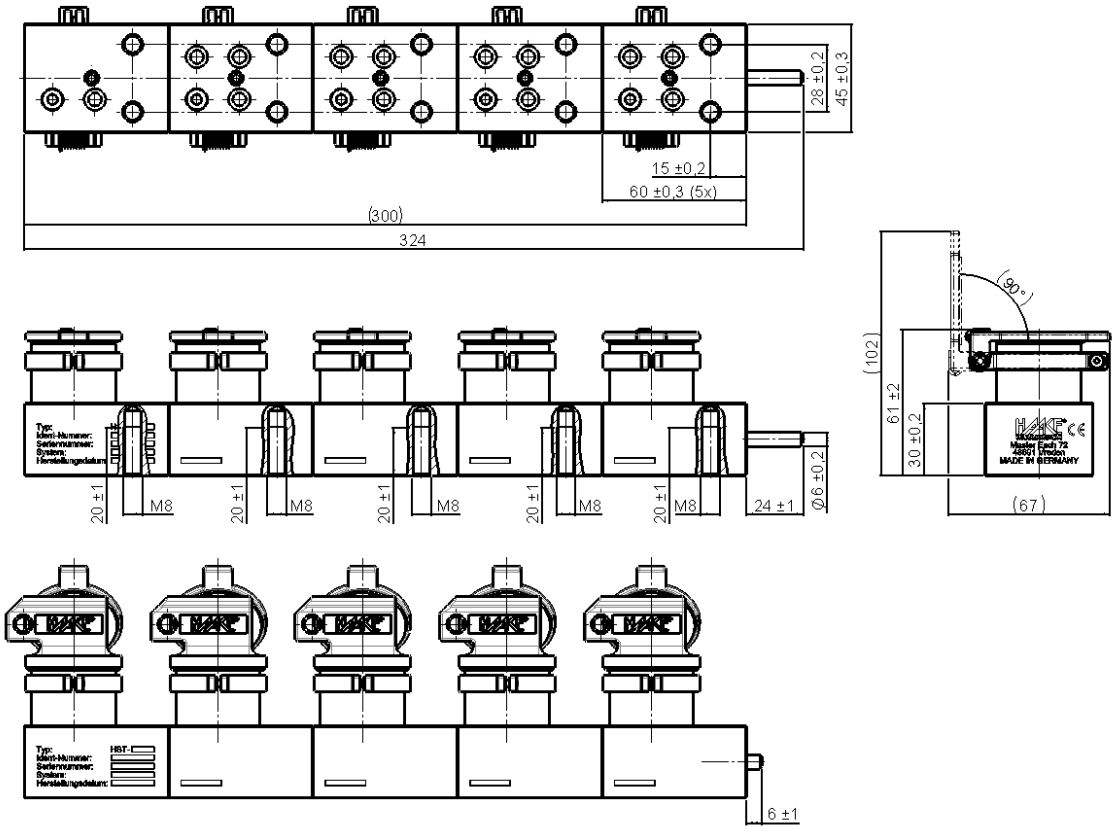

HST-B3 Ident.-No.: 12211

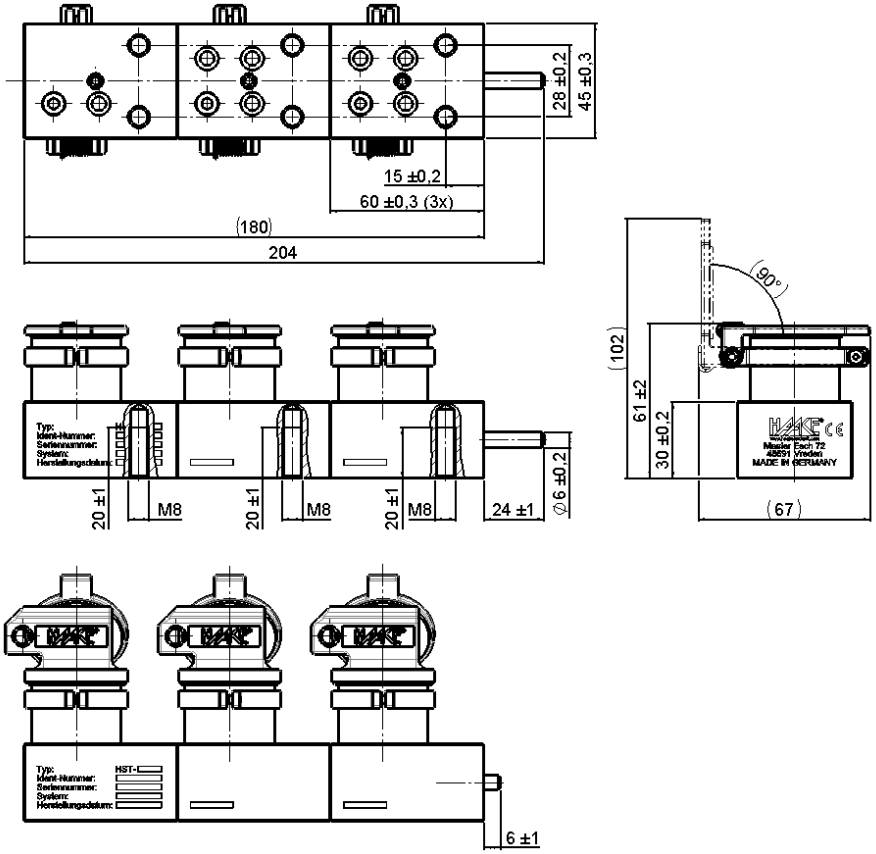

HST-B2 Ident.-No.: 12233

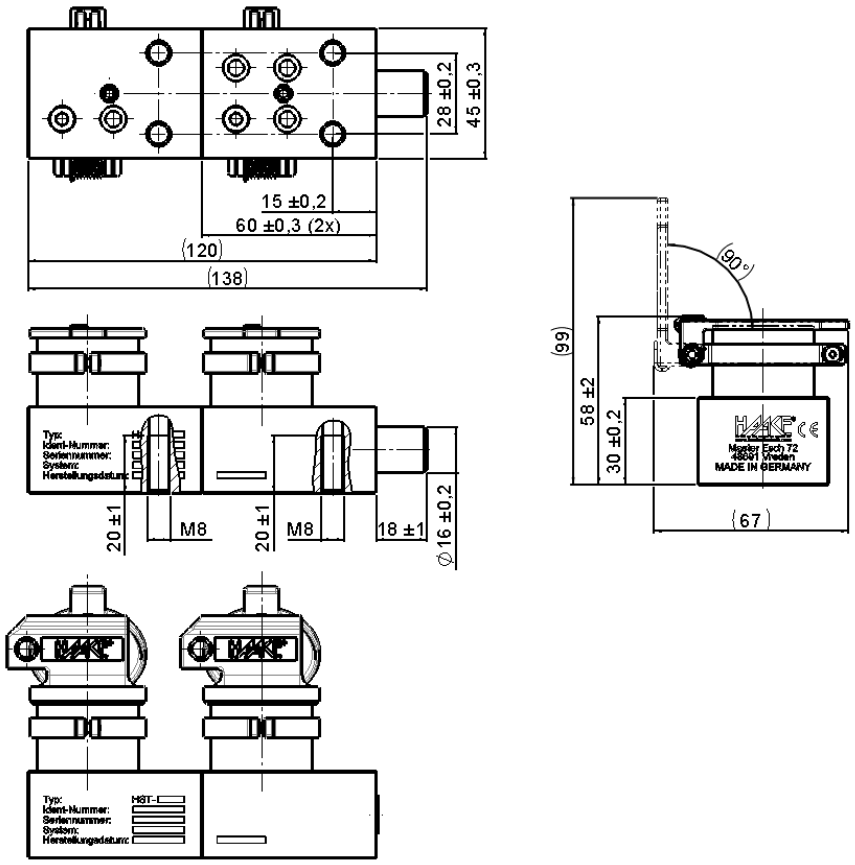

20 EC Declaration of Conformity

EC Declaration of Conformity
in accordance with EC Directive 2006/42/EC Annex II 1. A

The company:	**Haake Technik GmbH** **Master Esch 72** **48691 Vreden**
hereby declares that the safety components:	**Interlocking device**
Type:	**HST-B**
Serial Number:	**see information on the product**

in the delivered version is in accordance with the following relevant regulations:

EC Directives:	**Directive on machinery 2006/42/EC**
Test Specification:	**GS-ET 31** **Principles of testing and certification for** **Interlocking devices with key transfer systems**

The HST-B interlocking device blocks those switching elements of switchgears and control gears which are not part of the interlocking device. The locking bolt can be inserted or removed from the corresponding recess in the switch actuator to prevent or allow it to operate.

Our quality assurance system ensures that all safety components are manufactured with the same quality.
Therefore the Declaration of Conformity issued applies for all safety components of the above types produced from serial number 1130510.

Authorized representative to compile the technical documentation is:

HAAKE Technik GmbH
Herr Jens Schoppen
Master Esch 72
48691 Vreden

Vreden, 07.12.2012

André Haake
(General Manager)

HAAKE Technik GmbH; Master Esch 72; 48691 Vreden
Phone: (02564) 39650 Fax: (02564) 396590



Haake Technik GmbH
Master Esch 72
48691 Vreden, Deutschland
info@haake-technik.com
www.haake-technik.com
Tel.: +49 2564 39650
Fax: +49 2564 396590